N

# Lighting Trunking System
## Heights: H60 mm
## Widths: 75.120 mm
## Thickness: 0.7 - 1.0 mm

## EXAMPLES OF LIGHTING TRUNKING SYSTEM COMPONENTS

| | | |
|---|---|---|
| **Horizontal Cross-over CZKLJ...** | 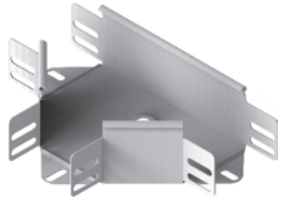 **Horizontal Tee TKLJ...** | **90° Horizontal Bend KKLJ...** |
| **Hanger WSKL...** | **Hanger WLS...** | **Hanger WSL...** |

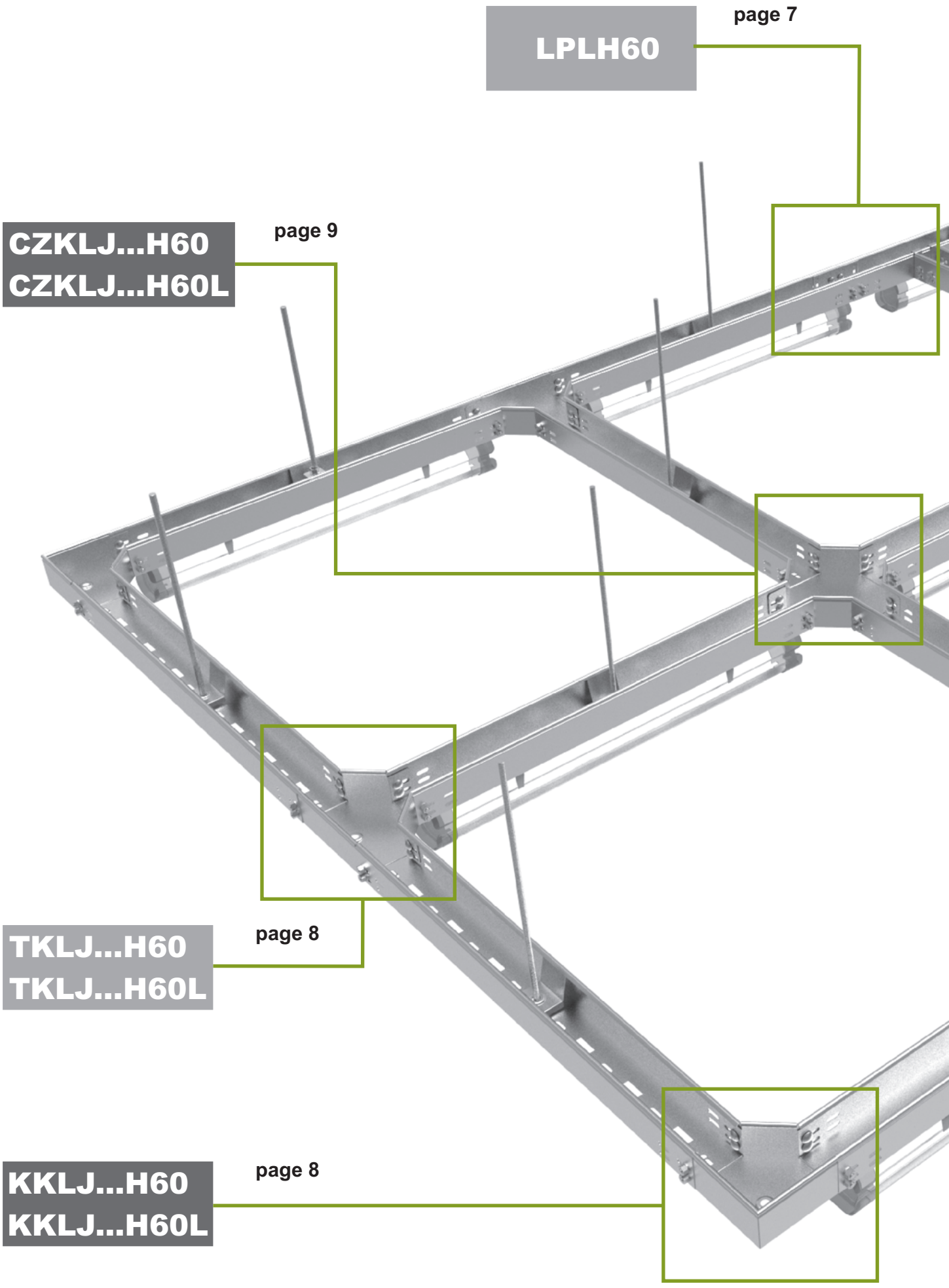
LPLH60
page 7
CZKLJ...H60
CZKLJ...H60L
page 9
TKLJ...H60
TKLJ...H60L
page 8
KKLJ...H60
KKLJ...H60L
page 8

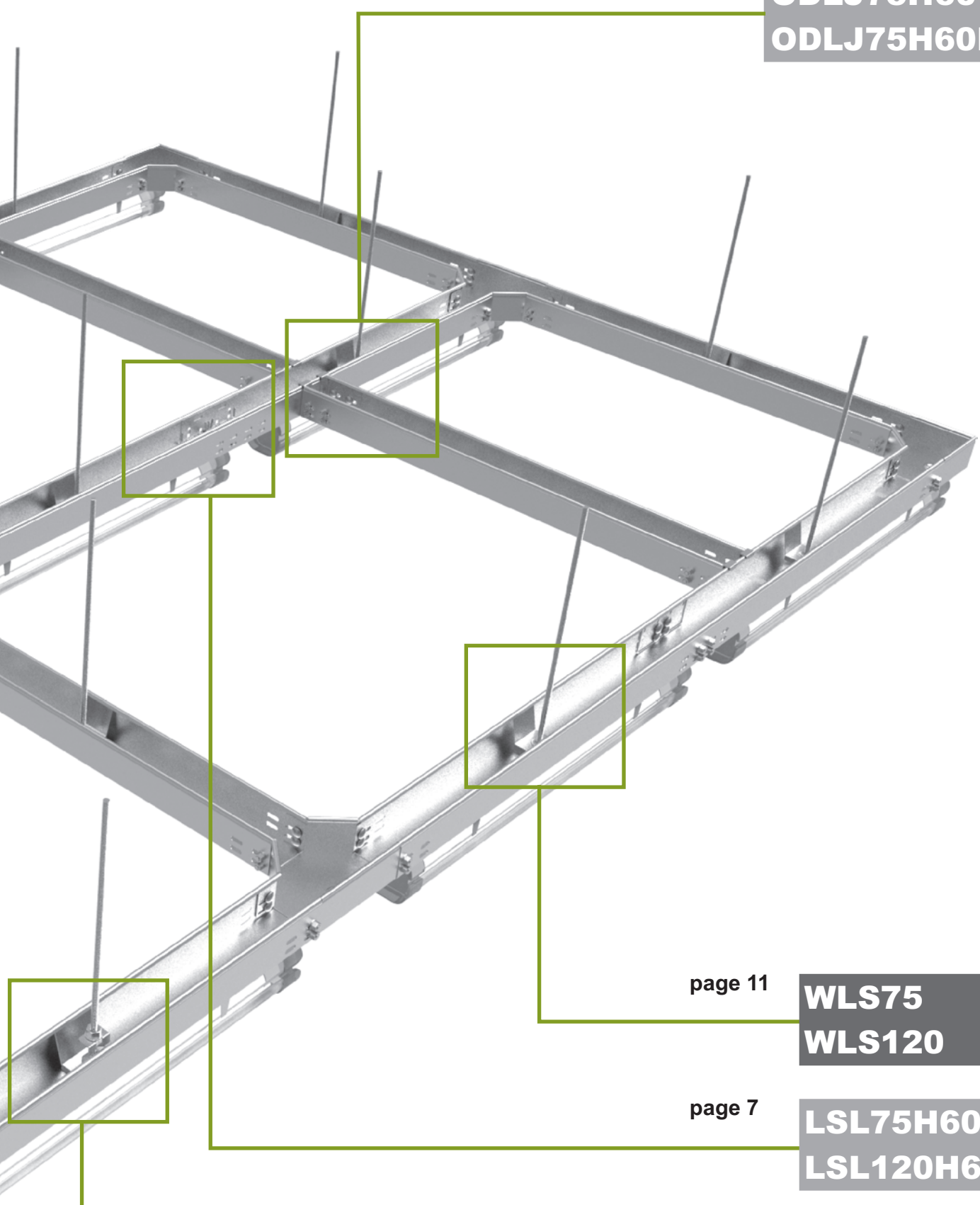

page 10

**ODLJ75H60**
**ODLJ75H60L**

page 11

**WLS75**
**WLS120**

page 7

**LSL75H60**
**LSL120H60**

page 11

**WSL75**
**WSL120**

## Cable Tray

KL...H60

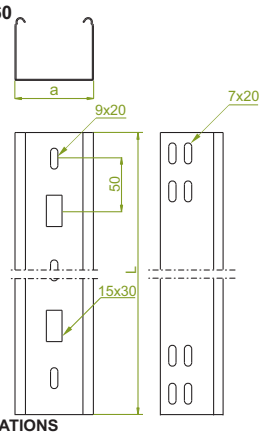


**APPLICATIONS**
Installation of light systems.

### KLL75H60

± 0.7 mm

| CODE | Widths a mm | Length L mm | kg 1m | Catalogue No. | Qty/m |
|---|---|---|---|---|---|
| KLL75H60/3 | 75 | 3000 | 1.12 | **160107** | 4/12 |
| KLL75H60/6 | 75 | 6000 | 1.12 | **160207** | 4/24 |

### KLJ120H60

± 1.0 mm

| CODE | Widths a mm | Length L mm | kg 1m | Catalogue No. | Qty/m |
|---|---|---|---|---|---|
| KLJ120H60/3 | 120 | 3000 | 1.95 | **160012** | 4/12 |
| KLJ120H60/6 | 120 | 6000 | 1.95 | **163012** | 4/24 |

**MATERIAL**
Steel, strip-galv. acc. to the Sendzimir method to PN-EN 10346:2015-09 (SG).
Available finishes:
**F -** steel, hot-dip galv. to PN-EN ISO 1461:2011 (HDG)
**E -** stainless steel (SS), grade 1.4301 (AISI304), (only 3m)

## Painted Cable Tray

KL...H60L

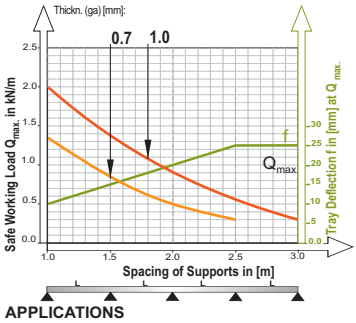


**APPLICATIONS**
Installation of light systems.

### KLL75H60L

± 0.7 mm

| CODE | Widths a mm | Length L mm | kg 1m | Catalogue No. | Qty/m |
|---|---|---|---|---|---|
| KLL75H60/3L | 75 | 3000 | 1.12 | **160507** | 4/12 |
| KLL75H60/6L | 75 | 6000 | 1.12 | **163007** | 4/24 |

### KLJ120H60L

± 1.0 mm

| CODE | Widths a mm | Length L mm | kg 1m | Catalogue No. | Qty/m |
|---|---|---|---|---|---|
| KLJ120H60/3L | 120 | 3000 | 1.95 | **163112** | 4/12 |
| KLJ120H60/6L | 120 | 6000 | 1.95 | **160412** | 4/24 |

**MATERIAL**
Steel, strip-galv. acc. to the Sendzimir method to PN-EN 10346:2015-09 (SG).
Powder coated only on outside to RAL9010
On request:
powder painting in standard RAL color
(info page 4)

## Cable Tray

KLW...H60

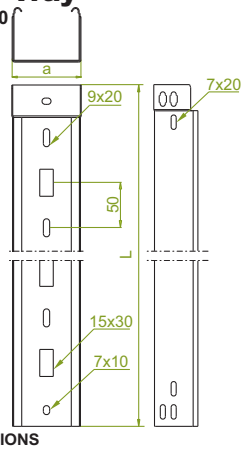


**APPLICATIONS**
Installation of light systems.

### KLWL75H60

± 0.7 mm

| CODE | Widths a mm | Length L mm | kg 1m | Catalogue No. | Qty/m |
|---|---|---|---|---|---|
| KLWL75H60/3 | 75 | 3000 | 1.12 | **164007** | 4/12 |
| KLWL75H60/6 | 75 | 6000 | 1.12 | **164107** | 4/24 |

### KLWJ120H60

± 1.0 mm

| CODE | Widths a mm | Length L mm | kg 1m | Catalogue No. | Qty/m |
|---|---|---|---|---|---|
| KLWJ120H60/3 | 120 | 3000 | 1.95 | **164112** | 4/12 |
| KLWJ120H60/6 | 120 | 6000 | 1.95 | **164212** | 4/24 |

**Possibility of joining cable tray sections together through sliding one into another and connector-free assembly. For installation use Screw Sets SGKM6x12 or SGM6x12.**

**IMPORTANT!**
**Production is possible only for big orders.**

**MATERIAL**
Steel, strip-galv. acc. to the Sendzimir method to PN-EN 10346:2015-09 (SG).
Available finishes:
**F -** steel, hot-dip galv. to PN-EN ISO 1461:2011 (HDG)
**E -** stainless steel (SS), grade 1.4301 (AISI304), (only 3m)

## Painted Cable Tray

KL...H60L

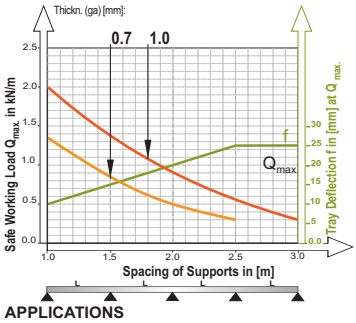


**APPLICATIONS**
Installation of light systems.

### KLWL75H60L

± 0.7 mm

| CODE | Widths a mm | Length L mm | kg 1m | Catalogue No. | Qty/m |
|---|---|---|---|---|---|
| KLWL75H60/3L | 75 | 3000 | 1.12 | **164207** | 4/12 |
| KLWL75H60/6L | 75 | 6000 | 1.12 | **164307** | 4/24 |

### KLWJ120H60L

± 1.0 mm

| CODE | Widths a mm | Length L mm | kg 1m | Catalogue No. | Qty/m |
|---|---|---|---|---|---|
| KLWJ120H60/3L | 120 | 3000 | 1.95 | **164312** | 4/12 |
| KLWJ120H60/6L | 120 | 6000 | 1.95 | **164412** | 4/24 |

**Possibility of joining cable tray sections together through sliding one into another and connector-free assembly. For installation use Screw Sets SGKM6x12 or SGM6x12.**

**IMPORTANT!**
**Production is possible only for big orders.**

**MATERIAL**
Steel, strip-galv. acc. to the Sendzimir method to PN-EN 10346:2015-09 (SG).
Powder coated only on outside to RAL9010
On request:
powder painting in standard RAL color
(info page 4)

Available in the first quarter of 2017

## Cable Tray

KLF...H60

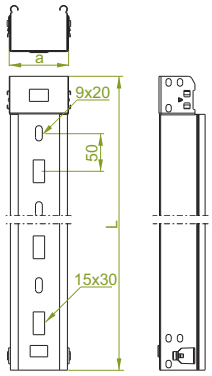


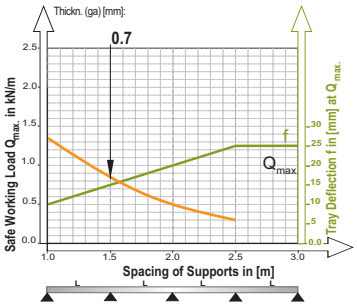


### KLFL75H60

± 0.7 mm

| CODE | Widths a mm | Length L mm | kg 1m | Catalogue No. | Qty/m |
|---|---|---|---|---|---|
| KLFL75H60/3 | 75 | 3000 | 1.12 | 164512 | 4/12 |
| KLFL75H60/6 | 75 | 6000 | 1.12 | 164622 | 4/24 |

Features & Benefits:
-fast and easy montage
-stable snap connection
-linkerless connection

## Cover Clamp

ZAP1...

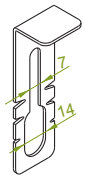


### ZAP1

| CODE | kg 1Qty | Catalogue No. | Qty |
|---|---|---|---|
| ZAP1 | 0.04 | 130900 | 100 |

### ZAP1L

| CODE | kg 1Qty | Catalogue No. | Qty |
|---|---|---|---|
| ZAP1L | 0.04 | 130904 | 100 |

**MATERIAL**
**ZAP1** - Steel, strip-galv. acc. to the Sendzimir method to PN-EN 10346:2015-09 (SG).
Available finishes:
**F -** steel galvanized using zinc flake coating method PN-EN ISO 10683:2014-09
**E -** stainless steel (SS), grade 1.4301 (AISI304),
**ZAP1L** -Steel, strip-galv. acc. to the Sendzimir method to PN-EN 10346:2015-09 (SG).
Powder coated to RAL9010
On request: powder painting in standard RAL color.
(info page 4)

## Cover Clamp

ZPN

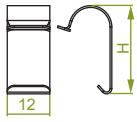


**APPLICATION**
Preventing the cover from slipping

### ZPNH60

| CODE | Height H mm | Catalogue No. | Qty |
|---|---|---|---|
| ZPNH60 | 29 | 165000 | 100 |

**MATERIAL**
Electro-galv. steel strip (EG) (ZPN)
Available finishes:
**F -** steel, hot-dip galv. to PN-EN ISO 1461:2011 (HDG)
**E -** stainless steel (SS), grade 1.4301 (AISI304),

## Cover

PKLR

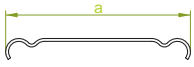


### PKLR75/3

± 0.5 mm

| CODE | Width a mm | Lenght L mm | kg 1m | Catalogue No. | Qty/mb |
|---|---|---|---|---|---|
| PKLR75/3 | 75 | 3000 | 0.34 | 163507 | 4/12 |

### PKLR120/3

± 0.5 mm

| CODE | Width a mm | Lenght L mm | kg 1m | Catalogue No. | Qty/mb |
|---|---|---|---|---|---|
| PKLR120/3 | 120 | 3000 | 0.54 | 163612 | 4/12 |

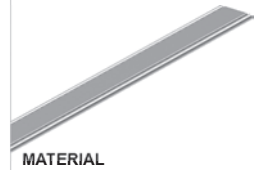

**MATERIAL**
Steel, strip-galv. acc. to the Sendzimir method to PN-EN 10346:2015-09 (SG).
Available finishes:
**F -** steel, hot-dip galv. to PN-EN ISO 1461:2011 (HDG)
**E -** stainless steel (SS), grade 1.4301 (AISI304), (only 3m)

## Painted Cover

PKLR...L

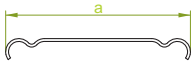


**APPLICATION**
Protecting cables against damage. Used in heavy dust indoor conditions

### PKLR75/3L

± 0.5 mm

| CODE | Width a mm | Lenght L mm | kg 1m | Catalogue No. | Qty/mb |
|---|---|---|---|---|---|
| PKLR75/3L | 75 | 3000 | 0.34 | 163607 | 4/12 |

### PKLR120/3L

± 0.5 mm

| CODE | Width a mm | Lenght L mm | kg 1m | Catalogue No. | Qty/mb |
|---|---|---|---|---|---|
| PKLR120/3L | 120 | 3000 | 0.54 | 163712 | 4/12 |

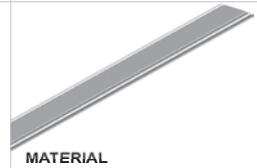

**MATERIAL**
Steel, strip-galv. acc. to the Sendzimir method to PN-EN 10346:2015-09 (SG).
Powder coated only on outside to RAL9010
On request:
powder painting in standard RAL color
(info page 4)

## Joining cable trays KLW...

Connection by sliding in one end of tray into another.

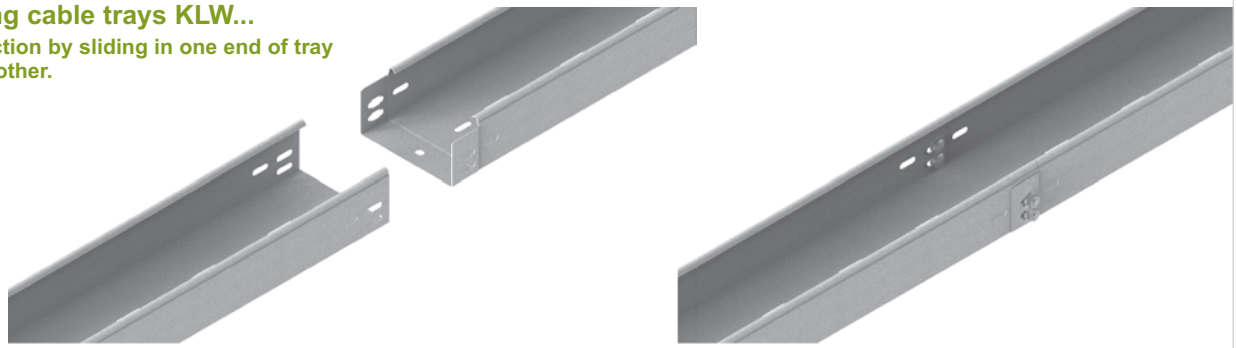

## Attaching cover clamp ZAP1

Additional hole in the side is used to attach clamp and secure it by SGM6x12 screws

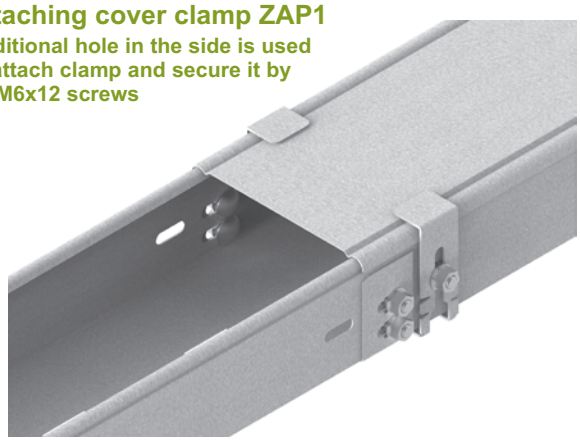

## Attaching cover clamp ZPNH60

Additional hole in the side is used to attach clamp.

## Joining cable trays

Joining cable trays in case of cutting it on site

Drill necessary holes in tray sides

Use drilled holes to install connector LPLH60 and secure it by screws

Use drilled holes to install cover clamp ZAP1

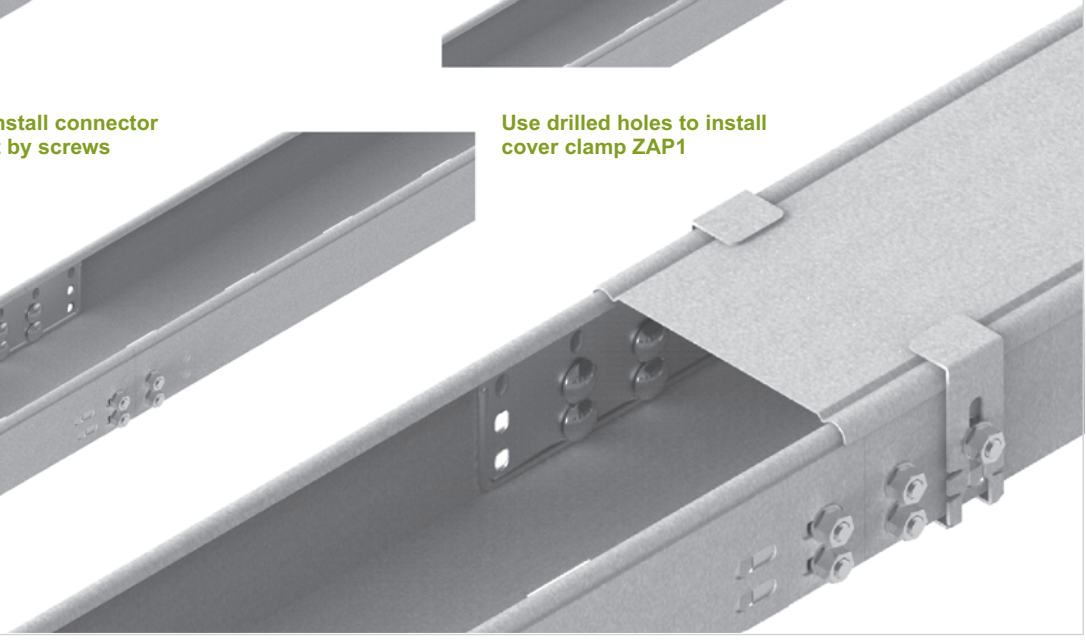

Attention! Hot dip galvanizing (PN-EN ISO 1461:2011 (HDG)) and diffusion galvanizing method (PN-EN ISO 17668:2016) for elements up to 200mm will be replaced with zink flake coating method PN-EN ISO 10683:2014-09

## Snap-In Connector Set

**LSL...H60**

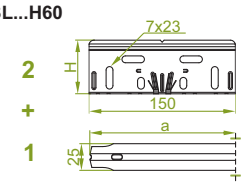


**APPLICATIONS**
Fastening cable runs quickly without the screws

### LSL...H60

± 0.7 mm

| CODE | Widths a mm | kg 1Qty | Catalogue No. | Qty |
|---|---|---|---|---|
| LSL75H60 | 75 | 0.11 | 163207 | 50 |
| LSL120H60 | 120 | 0.14 | 163312 | 50 |

When applying snap-in connectors for Cable Trays: KLL... and KLJ... fast and rigid connection is gained, that will enable the continuation of cable routing

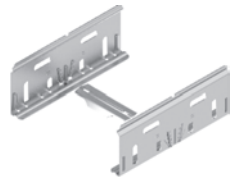

**MATERIAL**
Steel, strip-galv. acc. to the Sendzimir method to PN-EN 10346:2015-09 (SG)

## Straight Connector

**LPLH60**

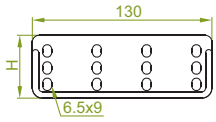


### LPLH60

± 0.7 mm

| CODE | Heights H mm | kg 1Qty | Catalogue No. | Qty |
|---|---|---|---|---|
| LPLH60 | 55 | 0.04 | 163011 | 100 |

For the assembly use min. 4 sets of Screw Sets SGKM6x12 or SGM6x12
Apply Straight Connectors LPL and LPP for sturdy and firm tray joint

## Articulated Connector

**LGJH60**

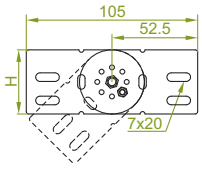


### LGJH60

± 1.0 mm

| CODE | Heights H mm | kg 1Qty | Catalogue No. | Qty |
|---|---|---|---|---|
| LGJH60 | 50 | 0.09 | 162400 | 100 |

For the assembly use 4 sets of Screw Sets SGKM6x12 or SGM6x12

**MATERIAL**
Steel, strip-galv. acc. to the Sendzimir method to PN-EN 10346:2015-09 (SG).
Available finishes:
**F** - steel galvanized using zinc flake coating method PN-EN ISO 10683:2014-09
**E** - stainless steel (SS), grade 1.4301 (AISI304),
**L** - powder painting in standard RAL color (info page 4)

## Angle Connector

**LKJ/LKOJH60**

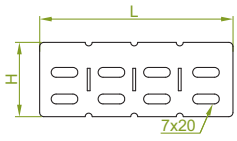


**APPLICATIONS**
Connecting cable routes.

### LKJ/LKOJH60

± 1.0 mm

| CODE | Heights H mm | Length L mm | kg 1Qty | Catalogue No. | Qty |
|---|---|---|---|---|---|
| LKJ/LKOJH60 | 50 | 140 | 0.03 | 162500 | 100 |
| LKJH60/1 | 50 | 1000 | 0.22 | 162600 | 10 |

Optional bending or break-off of any required length.
For the assembly use 4 sets of Screw Sets SGKM6x10 or SGM6x10

E-90

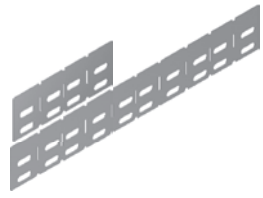

**MATERIAL**
Steel, strip-galv. acc. to the Sendzimir method to PN-EN 10346:2015-09 (SG).
Available finishes:
**F** - steel, hot-dip galv. to PN-EN ISO 1461:2011 (HDG)
**E** - stainless steel (SS), grade 1.4301 (AISI304),
**L** - powder painting in standard RAL color (info page 4)

**Application Example of LSL75H60**

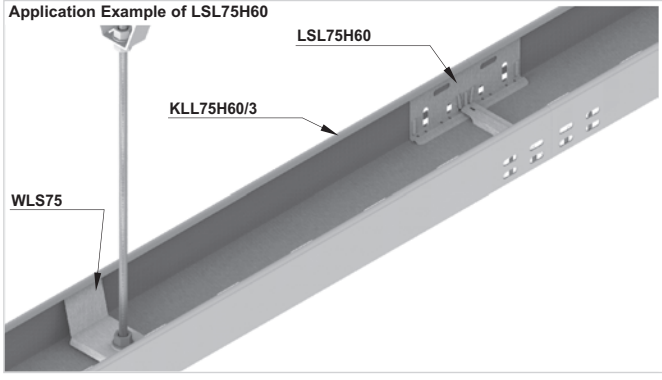


**Application Example of LPLH60**

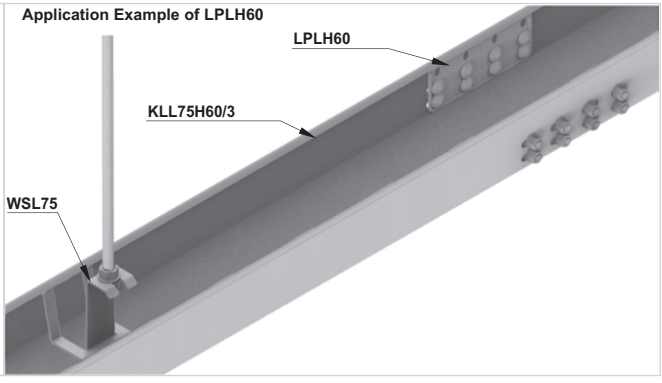


E-90 For detailed information, see section XIX



Thickn. (ga) ± [mm]: 0.5 0.7 1.0 1.2 1.5 2.0

## 90° Horizontal Bend

KKLJ...

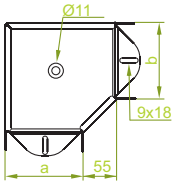


### KKLJ...H60

± 1.0 mm

| CODE | Widths a=b mm | kg 1Qty | Catalogue No. | Qty |
|---|---|---|---|---|
| KKLJ75H60 | 75 | 0.32 | 160607 | 20 |
| KKLJ120H60 | 120 | 0.46 | 163412 | 20 |

**MATERIAL**
Steel, strip-galv. acc. to the Sendzimir method to PN-EN 10346:2015-09 (SG).
Available finishes:
**F -** steel, hot-dip galv. to PN-EN ISO 1461:2011 (HDG)
**E -** stainless steel (SS), grade 1.4301 (AISI304),

## Painted 90° Horizontal Bend

KKLJ...L

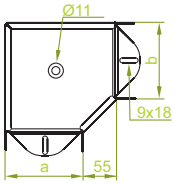


**APPLICATIONS**
Diversions in cable routing.

### KKLJ...H60L

± 1.0 mm

| CODE | Widths a=b mm | kg 1Qty | Catalogue No. | Qty |
|---|---|---|---|---|
| KKLJ75H60L | 75 | 0.32 | 160707 | 20 |
| KKLJ120H60L | 120 | 0.46 | 160712 | 20 |

**MATERIAL**
Steel, strip-galv. acc. to the Sendzimir method to PN-EN 10346:2015-09 (SG).
Powder coated only on outside to RAL9010
On request:
powder painting in standard RAL color
(info page 4)

## Horizontal Tee

TKLJ...

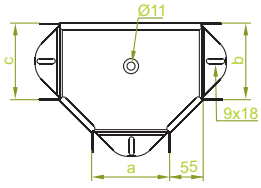


### TKLJ...H60

± 1.0 mm

| CODE | Widths a=b=c mm | kg 1Qty | Catalogue No. | Qty |
|---|---|---|---|---|
| TKLJ75H60 | 75 | 0.37 | 160807 | 20 |
| TKLJ120H60 | 120 | 0.52 | 160812 | 20 |

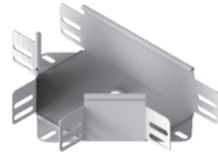

**MATERIAL**
Steel, strip-galv. acc. to the Sendzimir method to PN-EN 10346:2015-09 (SG).
Available finishes:
**F -** steel, hot-dip galv. to PN-EN ISO 1461:2011 (HDG)
**E -** stainless steel (SS), grade 1.4301 (AISI304),

## Painted Horizontal Tee

TKLJ...L

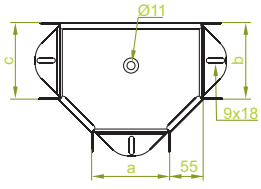


**APPLICATIONS**
Branching out cable routes.

### TKLJ...H60L

± 1.0 mm

| CODE | Widths a=b=c mm | kg 1Qty | Catalogue No. | Qty |
|---|---|---|---|---|
| TKLJ75H60L | 75 | 0.37 | 160907 | 20 |
| TKLJ120H60L | 120 | 0.52 | 160912 | 20 |

Covers for fittings available on request.

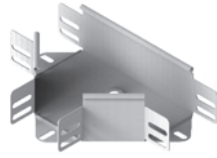

**MATERIAL**
Steel, strip-galv. acc. to the Sendzimir method to PN-EN 10346:2015-09 (SG).
Powder coated only on outside to RAL9010
On request:
powder painting in standard RAL color
(info page 4)

**Application Example of KKLJ75H60**

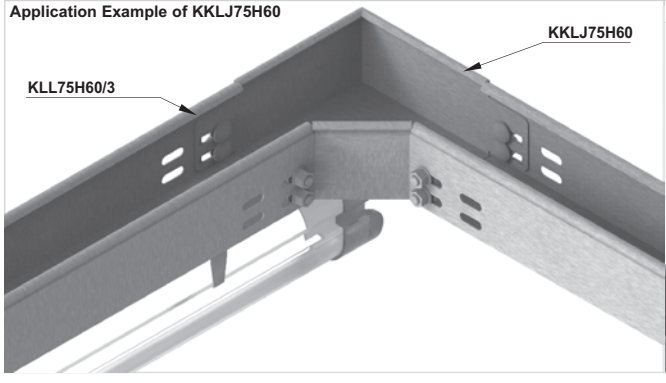


**Application Example of TKLJ75H60**

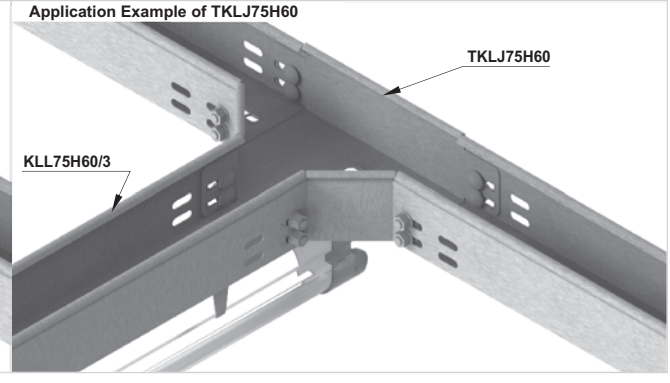


Thickn. (ga) ± [mm]: 0.5 | 0.7 | 1.0 | 1.2 | 1.5 | 2.0

## Horizontal Cross-over
CZKLJ...

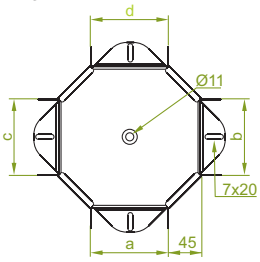


### CZKLJ...H60

± 1.0 mm

| CODE | Widths a=b=c=d mm | kg 1Qty | Catalogue No. | Qty |
|---|---|---|---|---|
| CZKLJ75H60 | 75 | 0.40 | 161007 | 20 |
| CZKLJ120H60 | 120 | 0.55 | 161012 | 20 |

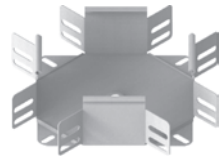

**MATERIAL**
Steel, strip-galv. acc. to the Sendzimir method to PN-EN 10346:2015-09 (SG).
Available finishes:
**F -** steel, hot-dip galv. to PN-EN ISO 1461:2011 (HDG)
**E -** stainless steel (SS), grade 1.4301 (AISI304),

## Painted Horizontal Cross-over
CZKLJ...L

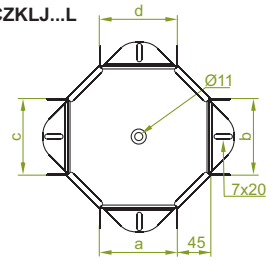


**APPLICATIONS**
Branching out cable routes.

### CZKLJ...H60L

± 1.0 mm

| CODE | Widths a=b=c=d mm | kg 1Qty | Catalogue No. | Qty |
|---|---|---|---|---|
| CZKLJ75H60L | 75 | 0.40 | 161107 | 20 |
| CZKLJ120H60L | 120 | 0.55 | 161112 | 20 |

**MATERIAL**
Steel, strip-galv. acc. to the Sendzimir method to PN-EN 10346:2015-09 (SG).
Powder coated only on outside to RAL9010
On request:
powder painting in standard RAL color
(info page 4)

## Straight Reducer
RKSLJ120/75H60

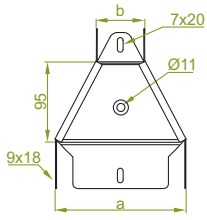


### RKSLJ120/75H60

± 1.0 mm

| CODE | Widths a mm | Widths b mm | kg 1Qty | Catalogue No. | Qty |
|---|---|---|---|---|---|
| RKSLJ120/75H60 | 120 | 75 | 0.21 | 161612 | 20 |

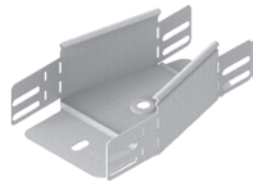

**MATERIAL**
Steel, strip-galv. acc. to the Sendzimir method to PN-EN 10346:2015-09 (SG).
Available finishes:
**F -** steel, hot-dip galv. to PN-EN ISO 1461:2011 (HDG)
**E -** stainless steel (SS), grade 1.4301 (AISI304),

## Painted Straight Reducer
RKSLJ120/75H60L

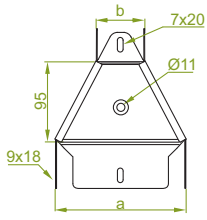


**APPLICATIONS**
Reducing/extending Width of cable runs

### RKSLJ120/75H60L

± 1.0 mm

| CODE | Widths a mm | Widths b mm | kg 1Qty | Catalogue No. | Qty |
|---|---|---|---|---|---|
| RKSLJ120/75H60L | 120 | 75 | 0.21 | 161712 | 20 |

Covers for fittings available on request.

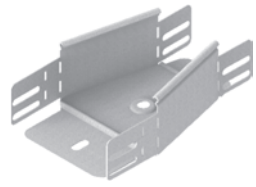

**MATERIAL**
Steel, strip-galv. acc. to the Sendzimir method to PN-EN 10346:2015-09 (SG).
Powder coated only on outside to RAL9010
On request:
powder painting in standard RAL color
(info page 4)

**Application Example of CZKLJ75H60**

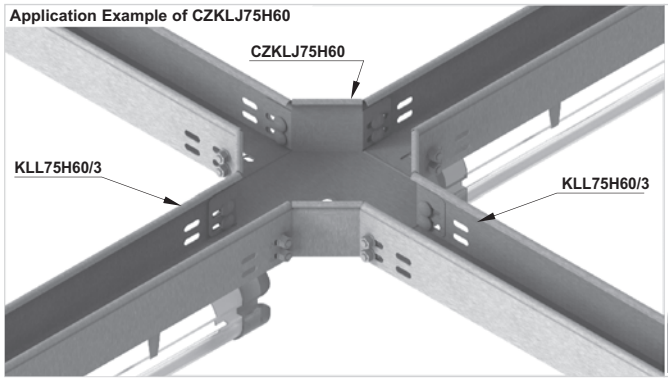


**Application Example of RKSLJ120/75H60**

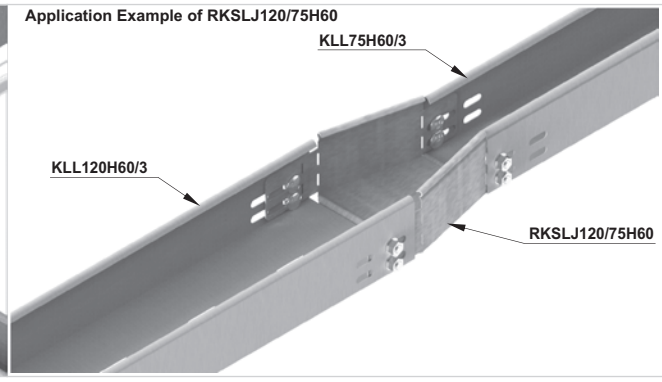




Thickn. (ga) ≠ [mm]: 0.5 0.7 1.0 1.2 1.5 2.0

Attention! Hot dip galvanizing (PN-EN ISO 1461:2011 (HDG)) and diffusion galvanizing method (PN-EN ISO 17668:2016) for elements up to 200mm will be replaced with zink flake coating method PN-EN ISO 10683:2014-09

## Add-on Tee

**ODLJ...**

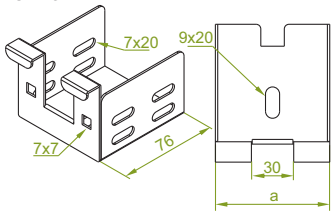


### ODLJ...H60

± 1.5 mm

| CODE | Widths a mm | kg 1Qty | Catalogue No. | Qty |
|---|---|---|---|---|
| ODLJ75H60 | 75 | 0.16 | 161207 | 20 |
| ODLJ120H60 | 120 | 0.25 | 161212 | 20 |

**MATERIAL**
Steel, strip-galv. acc. to the Sendzimir method to PN-EN 10346:2015-09 (SG).
Available finishes:
**F -** steel galvanized using zinc flake coating method PN-EN ISO 10683:2014-09
**E -** stainless steel (SS), grade 1.4301 (AISI304),

## Painted Add-on Tee

**ODLJ...L**

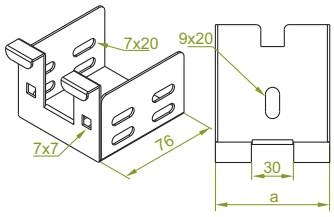


**APPLICATIONS**
Branching out cable routes.

### ODLJ...H60L

± 1.5 mm

| CODE | Widths a mm | kg 1Qty | Catalogue No. | Qty |
|---|---|---|---|---|
| ODLJ75H60L | 75 | 0.16 | 161307 | 20 |
| ODLJ120H60L | 120 | 0.25 | 161312 | 20 |

**MATERIAL**
Steel, strip-galv. acc. to the Sendzimir method to PN-EN 10346:2015-09 (SG).
Powder coated only on outside to RAL9010
On request:
powder painting in standard RAL color
(info page 4)

## Base Plate

**PMLJ...**

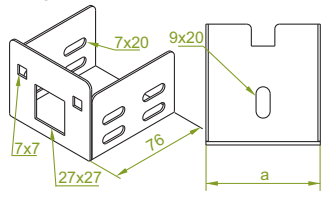


### PMLJ...H60

± 1.5 mm

| CODE | Widths a mm | kg 1Qty | Catalogue No. | Qty |
|---|---|---|---|---|
| PMLJ75H60 | 75 | 0.15 | 163307 | 20 |
| PMLJ120H60 | 120 | 0.24 | 161412 | 20 |

**MATERIAL**
Steel, strip-galv. acc. to the Sendzimir method to PN-EN 10346:2015-09 (SG).
Available finishes:
**F -** steel galvanized using zinc flake coating method PN-EN ISO 10683:2014-09
**E -** stainless steel (SS), grade 1.4301 (AISI304),

## Painted Base Plate

**PMLJ...L**

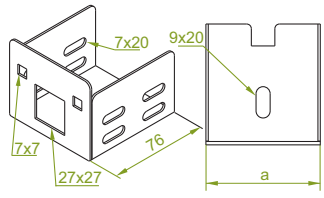


**APPLICATIONS**
Assembling Cable Tray directly from the wall

### PMLJ...H60L

± 1.5 mm

| CODE | Widths a mm | kg 1Qty | Catalogue No. | Qty |
|---|---|---|---|---|
| PMLJ75H60L | 75 | 0.15 | 163407 | 20 |
| PMLJ120H60L | 120 | 0.24 | 161512 | 20 |

**MATERIAL**
Steel, strip-galv. acc. to the Sendzimir method to PN-EN 10346:2015-09 (SG).
Powder coated only on outside to RAL9010
On request:
powder painting in standard RAL color
(info page 4)

**Application Example of ODLJ75H60**

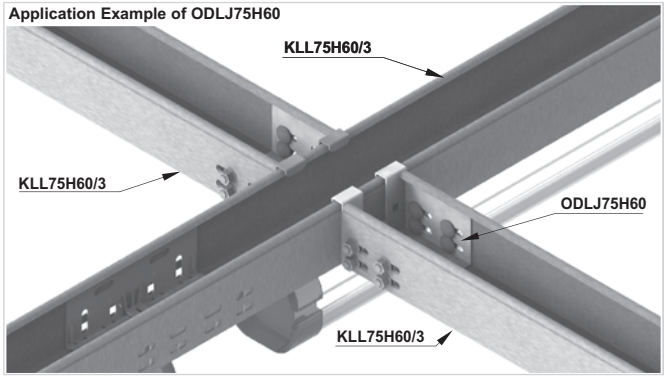


**Application Example of PMLJ75H60**

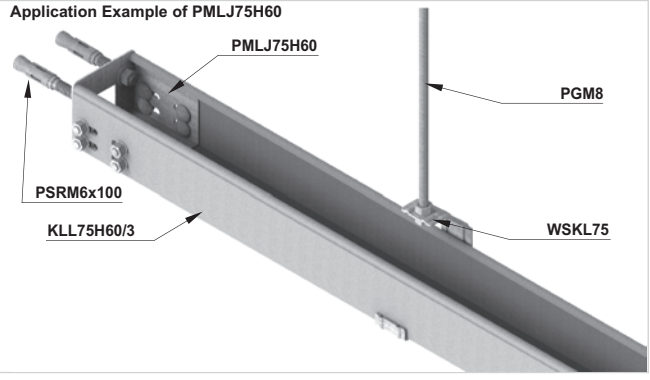


Thickn. (ga) ± [mm]: 0.5 | 0.7 | 1.0 | 1.2 | 1.5 | 2.0

Attention! Hot dip galvanizing (PN-EN ISO 1461:2011 (HDG)) and diffusion galvanizing method (PN-EN ISO 17668:2016) for elements up to 200mm will be replaced with zink flake coating method PN-EN ISO 10683:2014-09

## Blind End

ZKL

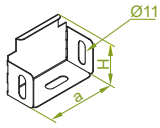


### ZKL...H60

± 1.0 mm

| CODE | Widths a mm | Heights H mm | kg 1pc | Catalogue No. | Qty |
|---|---|---|---|---|---|
| ZKL75H60 | 73 | 58 | 0.05 | 161607 | 100 |
| ZKL120H60 | 118 | 58 | 0.07 | 163512 | 100 |

**MATERIAL**
Steel, strip-galv. acc. to the Sendzimir method to PN-EN 10346:2015-09 (SG).
Available finishes:
**F -** steel galvanized using zinc flake coating method PN-EN ISO 10683:2014-09
**E -** stainless steel (SS), grade 1.4301 (AISI304),

## Painted Blind End

ZKL...L

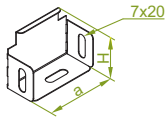


**APPLICATIONS**
To end cable route

### ZKL...H60L

± 1.0 mm

| CODE | Widths a mm | Heights H mm | kg 1pc | Catalogue No. | Qty |
|---|---|---|---|---|---|
| ZKL75H60L | 73 | 58 | 0.05 | 163807 | 100 |
| ZKL120H60L | 118 | 58 | 0.07 | 163812 | 100 |

**MATERIAL**
Steel, strip-galv. acc. to the Sendzimir method to PN-EN 10346:2015-09 (SG).
Powder coated only on outside to RAL9010
On request:
powder painting in standard RAL color
(info page 4)

## Hanger

WSKL

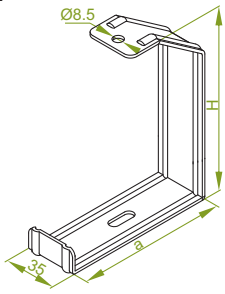


### WSKL...

| CODE | Widths a mm | Heights H mm | kg 1Qty | Catalogue No. | Qty |
|---|---|---|---|---|---|
| WSKL75 | 75 | 105 | 0.11 | 161707 | 100 |
| WSKL120 | 120 | 140 | 0.18 | 161912 | 50 |

**Features & Benefits:**
**Fast installation both directly to the ceiling, and with the use of a threaded rod.**

**MATERIAL**
Electro-galvanised steel (EG)
Available finishes:
**F -** steel galvanized using zinc flake coating method PN-EN ISO 10683:2014-09
**E -** stainless steel (SS), grade 1.4301 (AISI304)
**L -** powder painting in standard RAL color (info page 4)

## Hanger

WLS

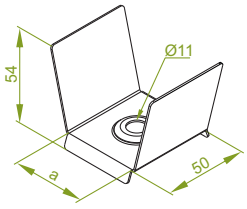


### WLS...

± 1.5 mm

| CODE | Widths a mm | Heights H mm | kg 1Qty | Catalogue No. | Qty |
|---|---|---|---|---|---|
| WLS75 | 75 | 54 | 0.07 | 161807 | 100 |
| WLS120 | 120 | 54 | 0.12 | 162012 | 50 |

**Features & Benefits:**
**Fast installation both directly to the ceiling, and with the use of a threaded rod.**

WSL

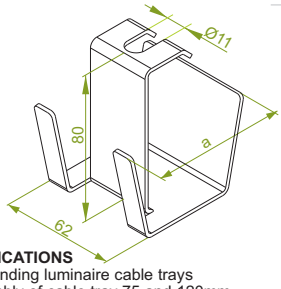


**APPLICATIONS**
Suspending luminaire cable trays
Assembly of cable tray 75 and 120mm wide

### WSL...

± 2.0 mm

| CODE | Widths a mm | Heights H mm | kg 1Qty | Catalogue No. | Qty |
|---|---|---|---|---|---|
| WSL75 | 75 | 51 | 0.08 | 161907 | 100 |
| WSL120 | 120 | 51 | 0.13 | 162112 | 50 |

**Features & Benefits:**
**Fast installation both directly to the ceiling, and with the use of a threaded rod.**

**MATERIAL**
Steel, strip-galv. acc. to the Sendzimir method to PN-EN 10346:2015-09 (SG).
Available finishes:
**F -** steel galvanized using zinc flake coating method PN-EN ISO 10683:2014-09
**E -** stainless steel (SS), grade 1.4301 (AISI304),

**Application Example of WSKL75**

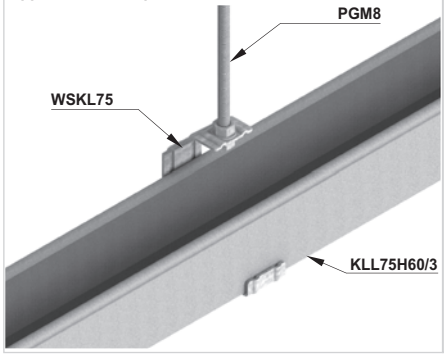


**Application Example of WLS75**

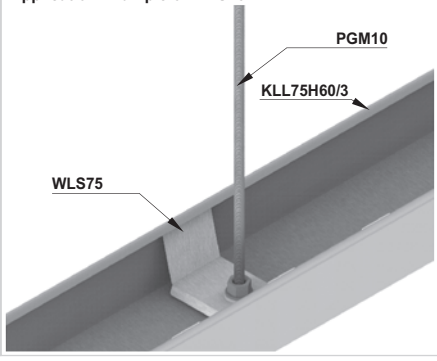


**Application Example of WSL75**

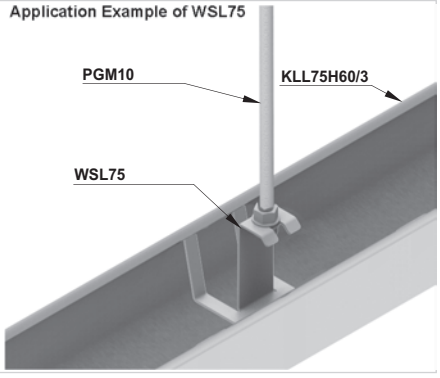




Thickn. (ga) ± [mm]: 0.5 0.7 1.0 1.2 1.5 2.0

Attention! Hot dip galvanizing (PN-EN ISO 1461:2011 (HDG)) and diffusion galvanizing method (PN-EN ISO 17668:2016) for elements up to 200mm will be replaced with zink flake coating method PN-EN ISO 10683:2014-09

## Bracket

### WFML

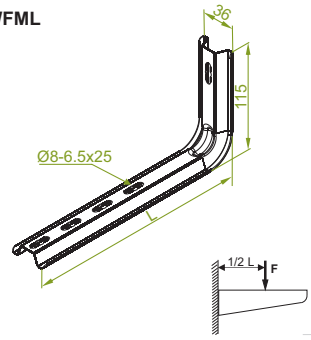


### WFML...

± 1.5 mm

| CODE | Length L mm | Allowable Tensile Load $F_{max}$[kN] | kg 1pc | Catalogue No. | Qty |
|---|---|---|---|---|---|
| WFML50 | 108 | 0.45 | 0.13 | 720112 | 30 |
| WFML100 | 158 | 0.40 | 0.16 | 720111 | 30 |
| WFML150 | 208 | 0.35 | 0.19 | 720116 | 30 |
| WFML200 | 258 | 0.30 | 0.22 | 720121 | 30 |

In installation the application of Spacer PD9

IMPORTANT! Non-standard lengths of brackets available to special order

### WFL/WFLO

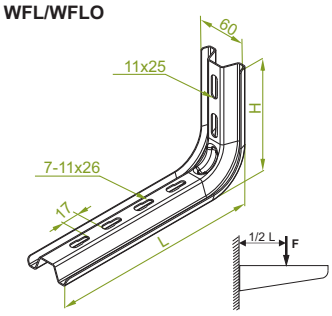


APPLICATIONS
Supporting cable trays.

### WFL/WFLO...

± 2.0 mm

| CODE | Length L mm | Heights H mm | Allowable Tensile Load $F_{max}$[kN] | kg 1pc | Catalogue No. | Qty |
|---|---|---|---|---|---|---|
| WFL/WFLO100 | 170 | 120 | 1.40 | 0.30 | 720110 | 30 |
| WFL/WFLO150 | 205 | 130 | 1.10 | 0.37 | 720115 | 30 |
| WFL/WFLO200 | 255 | 130 | 0.90 | 0.43 | 720120 | 30 |

In installation the application of Spacer PD11

IMPORTANT! Non-standard lengths of brackets available to special order

E -90

## Bracket

### WFMC

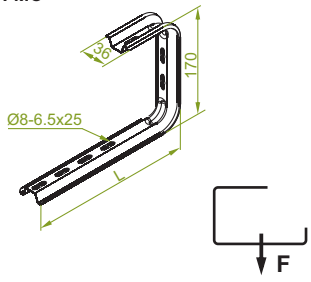


### WFMC...

± 1.5 mm

| CODE | Length L mm | Allowable Tensile Load $F_{max}$[kN] | kg 1pc | Catalogue No. | Qty |
|---|---|---|---|---|---|
| WFMC50 | 108 | 0.40 | 0.22 | 720312 | 20 |
| WFMC100 | 158 | 0.35 | 0.26 | 720311 | 20 |
| WFMC150 | 208 | 0.30 | 0.30 | 720316 | 20 |
| WFMC200 | 258 | 0.25 | 0.33 | 720321 | 20 |

### WFC/WFCO

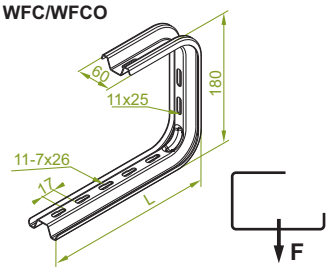


APPLICATIONS
Supporting cable trays.

### WFC/WFCO...

± 2.0 mm

| CODE | Length L mm | Allowable Tensile Load $F_{max}$[kN] | kg 1pc | Catalogue No. | Qty |
|---|---|---|---|---|---|
| WFC/WFCO100 | 165 | 0.85 | 0.47 | 720310 | 20 |
| WFC/WFCO150 | 205 | 0.70 | 0.53 | 720315 | 20 |
| WFC/WFCO200 | 255 | 0.50 | 0.60 | 720320 | 20 |

E -90

## Spacer

### PD9

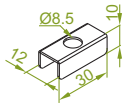


### PD11

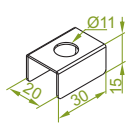


APPLICATIONS
PD11 - for Brackets WFC/WFCO, WFL, WFCS, WFLS
PD9 - for Brackets WFMC, WFML
Thanks to using spacers stiff hold is obtained

### PD9

| CODE | Dimension ∅ mm | kg 1pc | Catalogue No. | Qty |
|---|---|---|---|---|
| PD9 | 8.5 | 0.02 | 803200 | 100 |

### PD11

| CODE | Dimension ∅ mm | kg 1pc | Catalogue No. | Qty |
|---|---|---|---|---|
| PD11 | 11 | 0.03 | 803100 | 100 |

E -90

MATERIAL:
Steel, strip-galv. acc. to the Sendzimir method to PN-EN 10346:2015-09 (SG).
Available finishes:
**F** - steel galvanized using zinc flake coating method PN-EN ISO 10683:2014-09
**E** - stainless steel (SS), grade 1.4301 (AISI304)
**L** - powder painting in standard RAL color (info page 4)

E-90 For detailed information, see section XIX



Thickn. (ga) ± [mm]: 0.5 0.7 1.0 1.2 1.5 2.0

Attention! Hot dip galvanizing (PN-EN ISO 1461:2011 (HDG)) and diffusion galvanizing method (PN-EN ISO 17668:2016) for elements up to 200mm will be replaced with zink flake coating method PN-EN ISO 10683:2014-09

## Rod Hanger

US

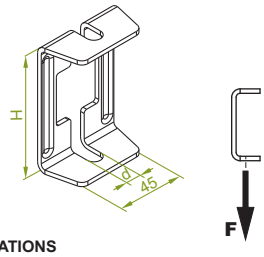


APPLICATIONS
Supporting cable trays.

### US...

≠ 2.0 mm

| CODE | Length H mm | Dimension d mm | Thickness mm | Safe Working Load $F_{max}$[kN] | kg 1pc | Catalogue No. | qty |
|---|---|---|---|---|---|---|---|
| US9 | 50 | 9 | 2 | 1.60 | 0.10 | 750708 | 100 |
| US12/USO12 | 80 | 12 | 3 | 1.50 | 0.14 | 750508 | 100 |

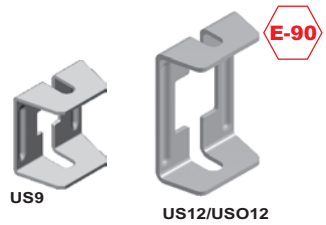


## Rod Hanger

WP

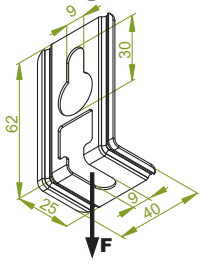


APPLICATIONS
Suspending cable routes. Smooth angle adjustment.

### WP

≠ 2.0 mm

| CODE | Safe Working max. $F_{max}$[kN] | kg 1pc | Catalogue No. | qty |
|---|---|---|---|---|
| WP | 0.60 | 0.04 | 731300 | 100 |

MATERIAL
Steel, strip-galv. acc. to the Sendzimir method to PN-EN 10346:2015-09 (SG).
Available finishes:
**F** - steel galvanized using zinc flake coating method PN-EN ISO 10683:2014-09
**E** - stainless steel (SS), grade 1.4301 (AISI304)
**L** - powder painting in standard RAL color (info page 4)

## Articulated Rod Hanger

WPPG

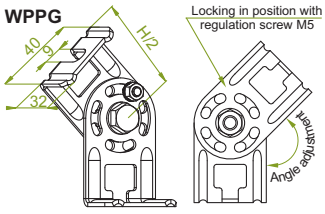


### WPPG

≠ 2.0 mm

| CODE | Heights H mm | Safe Working Load $F_{max}$[kN] | kg 1pc | Catalogue No. | qty |
|---|---|---|---|---|---|
| WPPG | 93 | 1.50 | 0.14 | 731400 | 100 |

WPPGN

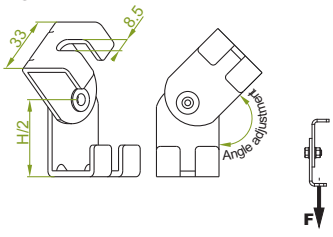


APPLICATIONS
Suspending cable routes from walls and ceilings run at an angle

### WPPGN

≠ 3.0 mm

| CODE | Heights H mm | Safe Working Load $F_{max}$[kN] | kg 1pc | Catalogue No. | qty |
|---|---|---|---|---|---|
| WPPGN | 78 | 1.60 | 0.30 | 731403 | 50 |

MATERIAL
Steel, strip-galv. acc. to the Sendzimir method to PN-EN 10346:2015-09 (SG).
Available finishes:
**F** - steel galvanized using zinc flake coating method PN-EN ISO 10683:2014-09
**E** - stainless steel (SS), grade 1.4301 (AISI304)
**L** - powder painting in standard RAL color (info page 4)

Application Example of US12/USO12

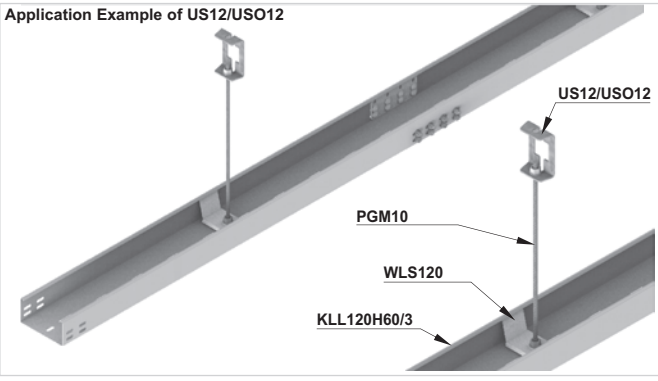


Application Example of WPPG

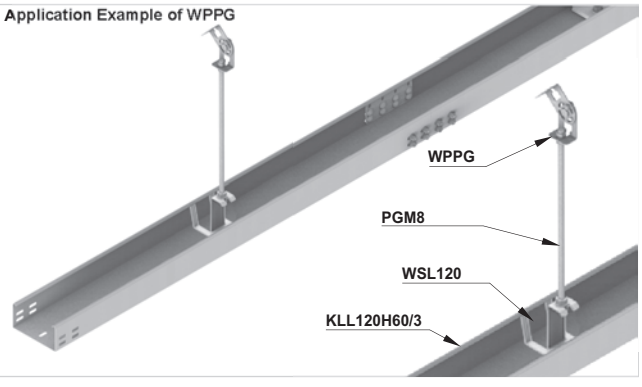


E-90 For detailed information, see section XIX

Thickn. (ga) ≠ [mm]: 0.5 0.7 1.0 1.2 1.5 2.0 3.0

## Hold Down Clamp

### UD

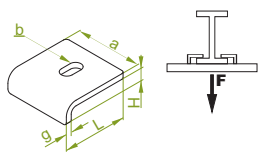


### UD...

| CODE | Length L mm | Widths a mm | Heights H mm | Hole b mm | Thickness mm | Safe Working Load $F_{max}$[kN] | kg 1pc | Catalogue No. | Qty |
|---|---|---|---|---|---|---|---|---|---|
| UD | 60 | 30 | 12 | 11x20 | 5 | 1.80 | 0.07 | 750706 | 100 |
| UD1 | 60 | 60 | 12 | 11x20 | 5 | 4.00 | 0.15 | 751206 | 50 |
| UD2 | 60 | 60 | 20 | 11x20 | 5 | 4.00 | 0.20 | 751306 | 50 |
| UD3 | 70 | 60 | 20 | 13x20 | 8 | 6.00 | 0.32 | 751406 | 30 |
| UD4 | 70 | 80 | 28 | 13x20 | 8 | 6.50 | 0.42 | 751606 | 25 |

### UDC

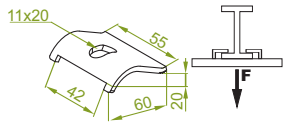


Stainless Steel version

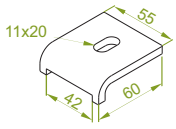


### UDC

≠ 6.0 mm

| CODE | Safe Working Load $F_{max}$[kN] | kg 1pc | Catalogue No. | Qty |
|---|---|---|---|---|
| UDC | 4.00 | 0.16 | 750806 | 50 |

E-90

Strong

### UDC1

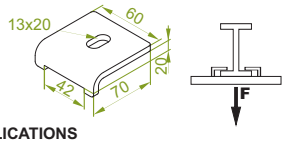


**APPLICATIONS**
Supporting cable trays.

### UDC1

≠ 8.0 mm

| CODE | Safe Working Load $F_{max}$[kN] | kg 1pc | Catalogue No. | Qty |
|---|---|---|---|---|
| UDC1 | 6.00 | 0.24 | 751506 | 30 |

Strong

**MATERIAL**
Steel galvanized using zinc flake coating method PN-EN ISO 10683:2014-09
Available finishes:
**E** - stainless steel (SS), grade 1.4301 (AISI304)
**L** - powder painting in standard RAL color (info page 4)

## Beam Clamp

### ZK

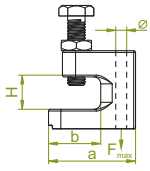


**APPLICATIONS**
Fixing threaded rods to I-beams, angles, etc.

### ZK...

| CODE | Dia. Ø mm | Dimension a mm | Dimension b mm | Dimension H mm | Safe Working Load $F_{max}$[kN] | kg 1pc | Catalogue No. | Qty |
|---|---|---|---|---|---|---|---|---|
| ZK8/19 | 9 | 38 | 21 | 19 | 1.20 | 0.13 | 752208 | 50 |
| ZK8/23 | 9 | 50 | 29 | 23 | 1.20 | 0.14 | 752209 | 50 |
| ZK10 | 11 | 45 | 23 | 22 | 1.20 | 0.14 | 752210 | 50 |
| ZK12 | 13 | 43 | 24 | 26 | 2.50 | 0.18 | 752212 | 50 |

E-90

**MATERIAL**
Forged steel, electro-galvanised
Available finishes:
**F** - forged steel galvanized using zinc flake coating method PN-EN ISO 10683:2014-09

## Beam Clamp

### ZDT

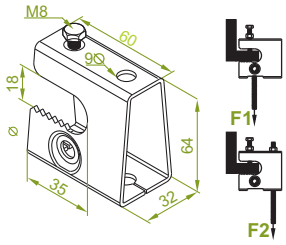


### ZDT

| CODE | Safe Working Load $F1_{max}$[kN] | Safe Working Load $F2_{max}$[kN] | kg 1pc | Catalogue No. | Qty |
|---|---|---|---|---|---|
| ZDT | 1.50 | 0.85 | 0.16 | 751106 | 50 |

**MATERIAL**
Steel, strip-galv. acc. to the Sendzimir method to PN-EN 10346:2015-09 (SG).
Available finishes:
**F** - steel galvanized using zinc flake coating method PN-EN ISO 10683:2014-09
**E** - stainless steel (SS), grade 1.4301 (AISI304)
**L** - powder painting in standard RAL color (info page 4)

## Beam Clamp

### ZCM1

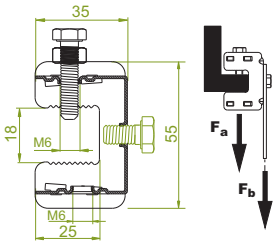


**APPLICATIONS**
Fixing threaded rods, clamps, etc to I-beams, angles, etc.

### ZCM1

| CODE | Safe Working Load $F_{a\,max}$[kN] | Safe Working Load $F_{b\,max}$[kN] | kg 1pc | Catalogue No. | Qty |
|---|---|---|---|---|---|
| ZCM1 | 0.50 | 0.20 | 0.07 | 752302 | 100 |

**Beam Clamp ZCM1 has 3 threaded holes M6 enabling various installation**

**MATERIAL**
Available finishes:
**F** - steel galvanized using zinc flake coating method PN-EN ISO 10683:2014-09
Available finishes:
**E** - stainless steel (SS), grade 1.4301 (AISI304)
**L** - powder painting in standard RAL color (info page 4)

E-90 For detailed information, see section XIX



Thickn. (ga) ≠ [mm]: 5.0 6.0 8.0

## Beam Clamp

ZCS

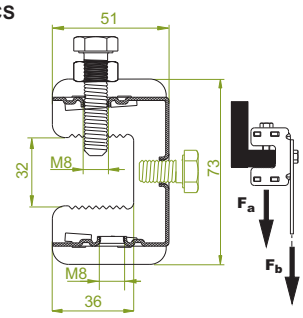


**APPLICATIONS**
Fixing threaded rods, clamps, etc to I-beams, angles, etc.

## ZCS

| CODE | Safe Working Load $F_{a\,max}$[kN] | Safe Working Load $F_{b\,max}$[kN] | kg 1pc | Catalogue No. | Qty |
|---|---|---|---|---|---|
| **ZCS** | 2.00 | 0.60 | 0.20 | **752502** | 50 |

**Beam Clamp ZCM1 has 3 threaded holes M8 enabling various installation**

**MATERIAL**
Steel, hot-dip galv. to
PN-EN ISO 1461:2011 (HDG)
Available finishes:
**E** - stainless steel (SS), grade 1.4301 (AISI304)
**L** - powder painting in standard RAL color
(info page 4)

## Beam Clamp

ZTK...

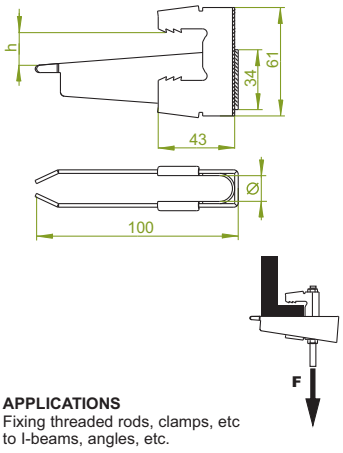


**APPLICATIONS**
Fixing threaded rods, clamps, etc to I-beams, angles, etc.

## ZTK...

| CODE | Dia. Ø mm | Dimension h mm | Safe Working Load $F_{max}$[kN] | kg 1pc | Catalogue No. | Qty |
|---|---|---|---|---|---|---|
| **ZTK6/8** | 6-8 | 8-20 | 2.00 | 0.15 | **751109** | 50 |
| **ZTK10** | 10 | 8-22 | 3.50 | 0.16 | **751209** | 50 |

**MATERIAL**
Electro-galvanised steel (EG)
Available finishes:
**E** - stainless steel (SS), grade 1.4301 (AISI304)
**L** - powder painting in standard RAL color
(info page 4)

## Channel Hanger

WBC

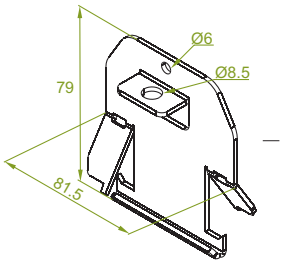


**APPLICATIONS**
Supporting cable trays.

## WBC75

± 1.5 mm

| CODE | kg 1pc | Catalogue No. | Qty |
|---|---|---|---|
| **WBC75** | 0.06 | **730113** | 100 |

**During installation special attention should be paid to construction firmness and durableness of intermediate elements**

| Channel Hanger WBC | When applying Genovese Chain **LNP2.2** with channel | When applying Threaded Rod **PG...** with channel | When applying Stranded Rope **LS...** with channel | When applying the chain for threaded rod, wire rope and cable tray gr=0.5mm | When applying the chain for threaded rod, wire rope and cable tray gr=0.7mm | When applying the chain for threaded rod, wire rope and cable tray gr=1.0mm |
|---|---|---|---|---|---|---|
| Safe Working Load "F" max. [kN] | 0.20 | 0.80 | 0.80 | 0.10 | 0.15 | 0.40 |

**MATERIAL**
Steel, strip-galv. acc. to the Sendzimir method to PN-EN 10346:2015-09 (SG).
Available finishes:
**F** - steel, hot-dip galv. to
PN-EN ISO 1461:2011 (HDG)
**E** - stainless steel (SS), grade 1.4301 (AISI304)
**L** - powder painting in standard RAL color
(info page 4)

Application Example of ZTK10

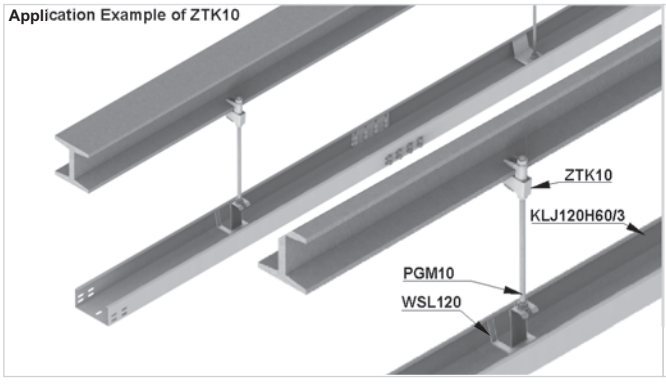


Application Example of WBC75

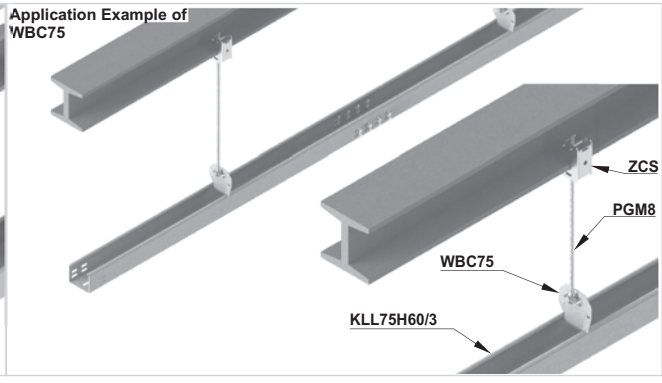




Thickn. (ga) ± [mm]: 0.5 0.7 1.0 1.2 1.5 2.0

## Trapezoidal Ceiling Bracket

**WT80**

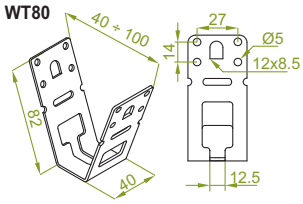


**APPLICATIONS**
Fastening to overhead structures and ceilings. Suspending component of cable runs, lighting, steel profiles, to standard trapezoidal decking sheets with the use of suspension pin or threaded rod.

### WT80

| CODE | Safe Working Load $F_{max}$[kN] | Catalogue No. | Qty |
|---|---|---|---|
| **WT80** | 1.20 | **730408** | 100 |

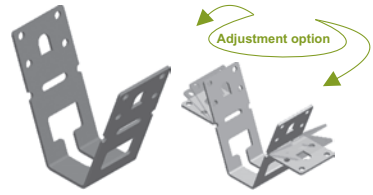


## Trapezoidal Ceiling Bracket

**WT/WTO120**

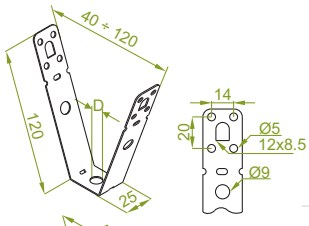

**Trapeze decking hangers are available with a hole plain or threaded**

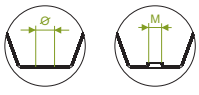


**APPLICATIONS**
Fastening to overhead structures and ceilings. Suspending component of cable runs, lighting, steel profiles, to standard trapezoidal decking sheets with the use of suspension pin or threaded rod.

### WT/WTO120...

| CODE | Dimension D mm | Safe Working Load $F_{max}$[kN] | Catalogue No. | Qty |
|---|---|---|---|---|
| **WT/WTO120M6** | M6 | 1.20 | **730512** | 100 |
| **WT/WTO120M8** | M8 | 1.20 | **730612** | 100 |
| **WT/WTO120Ø11** | **Ø11** | 1.20 | **730712** | 100 |

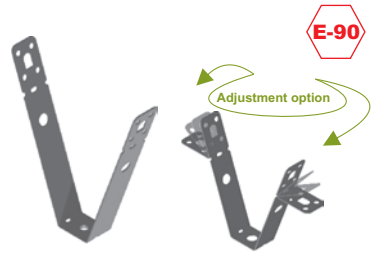


### WT180...

| CODE | Dimension D mm | Safe Working Load $F_{max}$[kN] | Catalogue No. | Qty |
|---|---|---|---|---|
| **WT180M6** | M6 | 1.20 | **730818** | 50 |
| **WT180M8** | M8 | 1.20 | **730918** | 50 |
| **WT180Ø11** | **Ø11** | 1.20 | **731018** | 50 |

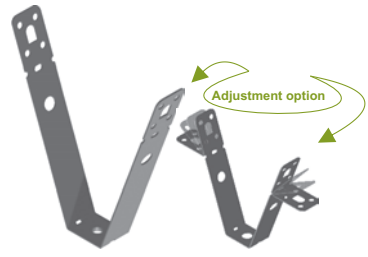


## Suspension Pin

**PWT**

**APPLICATIONS**
An element joining trapezoidal ceiling bracket with trapezoidal sheets. It enables quick installation.It will suit all suspension, rod, and window types of hangers and brackets.

### PWT...

| CODE | Length $L_{max}$ mm | Safe Working Load $F_{max}$[kN] | Catalogue No. | Qty |
|---|---|---|---|---|
| **PWT55** | 55 | 0.60 | **731105** | 200 |
| **PWT95** | 95 | 0.60 | **731109** | 200 |
| **PWT130** | 130 | 0.60 | **731113** | 200 |

**MATERIAL**
Steel, strip-galv. acc. to the Sendzimir method to PN-EN 10346:2015-09 (SG).
Available finishes:
**F** - steel, hot-dip galv. to PN-EN ISO 1461:2011 (HDG), only with Ø11 holes
**E** - stainless steel (SS), grade 1.4301 (AISI304), only with Ø11 holes
**L** - powder painting in standard RAL color (info page 4)

**Application Example of WT120Ø11**

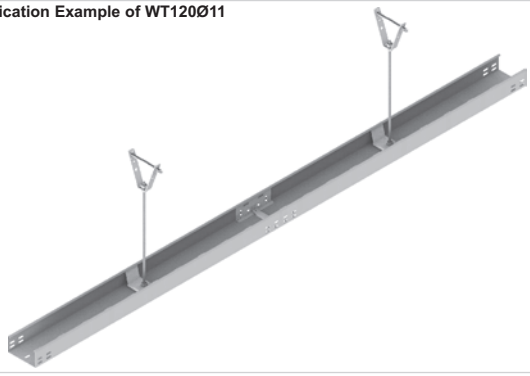

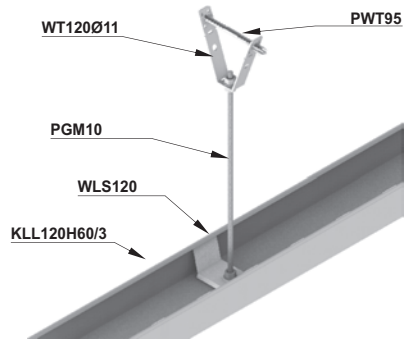


E-90 For detailed information, see section XIX

## Threaded Rod

**PG**

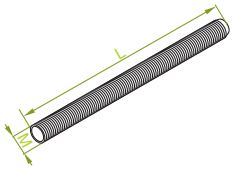


**APPLICATIONS**
Suspending cable runs.

### PGC...

| CODE | Dimension M mm | Length L mm | Breaking Force [kN] | kg 1Qty | Catalogue No. | Qty |
|---|---|---|---|---|---|---|
| PGCM8/1 | 8 | 1000 | 15.40 | 0.48 | 652401 | 50 |
| PGCM8/2 | 8 | 2000 | 15.40 | 0.96 | 652501 | 25 |
| PGCM10/2 | 10 | 2000 | 24.40 | 1.00 | 652601 | 25 |

STEEL GRADE 4.6

### PG...

| CODE | Dimension M mm | Length L mm | Breaking Force [kN] | kg 1Qty | Catalogue No. | Qty |
|---|---|---|---|---|---|---|
| PGM8/01 | 8 | 100 | 19.00 | 0.03 | 650501 | 100 |
| PGM8/02 | 8 | 200 | 19.00 | 0.06 | 650601 | 100 |
| PGM8/03 | 8 | 300 | 19.00 | 0.09 | 650701 | 50 |
| PGM8/1 | 8 | 1000 | 19.00 | 0.32 | 650801 | 50 |
| PGM8/2 | 8 | 2000 | 19.00 | 0.64 | 650901 | 25 |
| PGM8/3 | 8 | 3000 | 19.00 | 0.96 | 651501 | 25 |
| PGM10/1 | 10 | 1000 | 30.20 | 0.49 | 651001 | 25 |
| PGM10/2 | 10 | 2000 | 30.20 | 1.00 | 651101 | 25 |
| PGM10/3 | 10 | 3000 | 30.20 | 1.50 | 651601 | 25 |

STEEL GRADE 5.8

E-90

## Rod Connector

**NL**

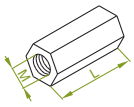


**APPLICATIONS**
Suspending cable runs.

### NL...

| CODE | Dimension M mm | Length L mm | Catalogue No. | Qty |
|---|---|---|---|---|
| NLM8 | 8 | 24 | 650203 | 100 |
| NLM10 | 10 | 30 | 650303 | 100 |

E-90

## Drop-In Anchor

**TRS**

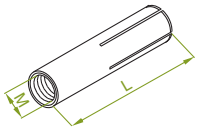


### TRS...

| CODE | Dimension M mm | Length L mm | Catalogue No. | Qty |
|---|---|---|---|---|
| TRSM8 | 8 | 30 | 650207 | 100 |
| TRSM10 | 10 | 40 | 650307 | 50 |

**MATERIAL**
Electro-galvanised steel (EG)
Available finishes:
**E-** Stainless steel, grade 1.4401 (A4)

## Drop-In Anchor Brass

**TRM**

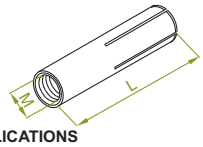


**APPLICATIONS**
Supporting cable trays.

### TRM...

| CODE | Dimension M mm | Length L mm | Catalogue No. | Qty |
|---|---|---|---|---|
| TRMM8 | 8 | 30 | 650209 | 100 |
| TRMM10 | 10 | 40 | 650309 | 50 |

**MATERIAL**
Brass.

## Washer

**PP**

### PP...

| CODE | To thread | Catalogue No. | Qty |
|---|---|---|---|
| PP8 | M8 | 650444 | 100 |
| PP10 | M10 | 650544 | 100 |

E-90

## Washer

**PW**

### PW...

| CODE | To thread | Catalogue No. | Qty |
|---|---|---|---|
| PW8 | M8 | 650944 | 100 |
| PW10 | M10 | 651044 | 100 |

E-90

## Nut

**NS**

**APPLICATIONS**
Supporting cable trays.

### NS...

| CODE | Dimension M mm | Catalogue No. | Qty |
|---|---|---|---|
| NSM8 | 8 | 650144 | 100 |
| NSM10 | 10 | 650244 | 100 |

E-90

**MATERIAL**
Electro-galvanised steel (EG)
Available finishes:
**E-** Stainless steel, grade 1.4301 (A2) or 1.4401 (A4)

E-90 For detailed information, see section XIX

## Screw Set

**SG**

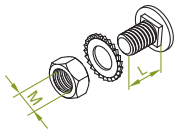


### SG...

| CODE | Dimension M mm | Length L mm | Catalogue No. | set |
|---|---|---|---|---|
| SGM6x10 | 6 | 10 | 650141 | 100 |
| SGM6x12 | 6 | 12 | 650641 | 100 |
| SGM6x25 | 6 | 25 | 650241 | 100 |

E-90

## Screw Set

**SGN/SGF**

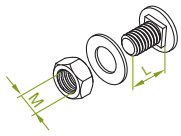


### SGNM6x12

| CODE | Dimension M mm | Length L mm | Catalogue No. | set |
|---|---|---|---|---|
| SGNM6x12 | 6 | 12 | 650442 | 100 |

### SGFM6x12

| CODE | Dimension M mm | Length L mm | Catalogue No. | set |
|---|---|---|---|---|
| SGFM6x12 | 6 | 12 | 650166 | 100 |

E-90

**MATERIAL**
Electro-galvanised steel (EG)
Available finishes:
**E-** stainless steel, grade 1.4301 (A2) or 1.4401 (A4)

## Screw Set

**SGK/SGKF**

### SGK...

| CODE | Dimension M mm | Length L mm | Dimension D mm | Catalogue No. | set |
|---|---|---|---|---|---|
| SGKM6x10 | 6 | 10 | 13 | 651041 | 100 |
| SGKM6x12 | 6 | 12 | 13 | 651141 | 100 |
| SGKM6x14 | 6 | 14 | 13 | 655041 | 100 |

**MATERIAL SGF/SGKF**
Hot-dip galvanised steel (HDG)

### SGKFM6x12

| CODE | Dimension M mm | Length L mm | Dimension D mm | Catalogue No. | set |
|---|---|---|---|---|---|
| SGKFM6x12 | 6 | 12 | 13 | 651441 | 100 |

E-90

**MATERIAL SGF/SGKF**
Steel galvanized using zinc flake coating method PN-EN ISO 10683:2014-09

**APPLICATIONS**
Suspending cable runs.

## Eye Bolt

**SHZ**

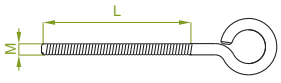


**APPLICATIONS**
Suspending Lighting Trunking Systems, cable trays, etc.

### SHZM6x80

| CODE | Dimension M mm | Length L mm | Catalogue No. | Qty |
|---|---|---|---|---|
| SHZM6x80 | 6 | 80 | 650129 | 100 |

## Pigtail Bolt

**SH**

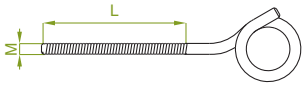


**APPLICATIONS**
Suspending Lighting Trunking Systems, cable trays, etc.

### SHM6x80

| CODE | Dimension M mm | Length L mm | Catalogue No. | Qty |
|---|---|---|---|---|
| SHM6x80 | 6 | 80 | 650127 | 100 |

## Anchor Bolt

**PSR**

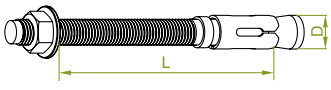


**APPLICATIONS**
Fixing assemblies, suspending cable runs from overhead concrete base

### PSR...

| CODE | Dimension D mm | Length L mm | Catalogue No. | Qty |
|---|---|---|---|---|
| PSRM6x65 | 6 | 65 | 650153 | 200 |
| PSRM6x100 | 6 | 100 | 650253 | 100 |
| PSRM8x75 | 8 | 75 | 650353 | 100 |
| PSRM8x115 | 8 | 115 | 650453 | 100 |

**MATERIAL**
Electro-galv. steel (EG).
Available upon request:
E- Stainless steel, grade 1.4401 (A4)

E-90 For detailed information, see section XIX

## Genovese Chain

**LNP**

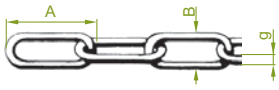


### LNP...

| CODE | Dimension g mm | Dimension AxB mm | Length L m | Allowable Tensile Load $F_{max}$[kN] | Catalogue No. | m |
|---|---|---|---|---|---|---|
| **LNP2.2** | 2.2 | 29x10 | 30 | 0.20 | **650111** | 30 |
| **LNP2** | 2 | 18x9 | 150 | 0.30 | **650211** | 150 |
| **LNP3** | 3 | 23x12.5 | 100 | 0.50 | **650311** | 100 |
| **LNP5** | 5 | 31x19 | 38 | 1.95 | **650411** | 38 |

## Victor Chain

**LNS**

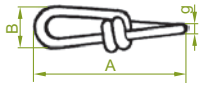


### LNS...

| CODE | Dimension g mm | Dimension AxB mm | Length L m | Allowable Tensile Load $F_{max}$[kN] | Catalogue No. | m |
|---|---|---|---|---|---|---|
| **LNS1.4** | 1.4 | 21x6.5 | 30 | 0.15 | **650213** | 30 |
| **LNS2** | 2 | 28x9 | 30 | 0.40 | **650113** | 30 |

**APPLICATIONS**
Suspending cable runs.

## Quick Link

**OS**

### OS...

| CODE | Dimension Ø mm | Allowable Tensile Load $F_{max}$[kN] | Catalogue No. | Qty |
|---|---|---|---|---|
| **OS4** | 4 | 0.40 | **650115** | 100 |
| **OS5** | 5 | 0.75 | **650215** | 100 |
| **OS6** | 6 | 1.00 | **650315** | 100 |

## Twisted Link

**OG**

### OG...

| CODE | Dimension Ø mm | Catalogue No. | Qty |
|---|---|---|---|
| **OG4** | 4 | **650117** | 100 |
| **OG5** | 5 | **650217** | 100 |
| **OG6** | 6 | **650317** | 100 |

## S-Hook

**HS**

### HS...

| CODE | Dimension Ø mm | Allowable Tensile Load $F_{max}$[kN] | Catalogue No. | Qty |
|---|---|---|---|---|
| **HS3** | 3 | 0.08 | **650119** | 100 |
| **HS4** | 4 | 0.23 | **650219** | 100 |
| **HS5** | 5 | 0.30 | **650319** | 100 |
| **HS6** | 6 | 0.50 | **650419** | 100 |
| **HS7** | 7 | 0.73 | **650519** | 100 |
| **HS8** | 8 | 1.00 | **650619** | 100 |

**APPLICATIONS**
Connecting chain links.

**MATERIAL**
Electro-galv. steel (EG).

## Thimble

**KU**

### KU...

| CODE | Thread Ø mm | Catalogue No. | Qty |
|---|---|---|---|
| **KU3** | 3 | **650125** | 100 |
| **KU4** | 4 | **650225** | 100 |
| **KU5** | 5 | **650325** | 100 |
| **KU6** | 6 | **650425** | 100 |
| **KU8** | 8 | **650525** | 100 |
| **KU10** | 10 | **650625** | 100 |

**APPLICATIONS**
Protecting wire ropes against abrasion.

## Wire Rope Grip

**ZL**

### ZL...

| CODE | Thread Ø mm | Suites Rope Dia. Ø mm | Catalogue No. | Qty |
|---|---|---|---|---|
| **ZL3** | 3 | 1.5; 2; 3 | **650123** | 100 |
| **ZL5** | 5 | 4; 5 | **650323** | 100 |
| **ZL6** | 6.5 | 6 | **650423** | 100 |
| **ZL8** | 8 | 8 | **650523** | 50 |
| **ZL10** | 10 | 10 | **650623** | 50 |

**MATERIAL**
Electro-galvanised steel (EG)
Available finishes:
**E-** stainless steel, grade 1.4301 (A2) or 1.4401 (A4)

**APPLICATIONS**
For cliping steel wire ropes

## Wire Rope

**LS**

### LS...

| CODE | Thread Ø mm | Length L m | Allowable Tensile Load $F_{max}$[kN] | Catalogue No. | m |
|---|---|---|---|---|---|
| **LS1.5** | 1.5 | 300 | 0.19 | **650021** | 300 |
| **LS2** | 2 | 250 | 1.00 | **650121** | 250 |
| **LS3** | 3 | 200 | 1.36 | **650221** | 200 |
| **LS4** | 4 | 150 | 2.65 | **650321** | 150 |
| **LS5** | 5 | 150 | 4.00 | **650421** | 150 |
| **LS6** | 6 | 100 | 5.32 | **650521** | 100 |
| **LS8** | 8 | 100 | 8.55 | **650621** | 50 |
| **LS10** | 10 | 50 | 14.00 | **650721** | 50 |

**APPLICATIONS**
Suspending Cable Trays of the Light System .

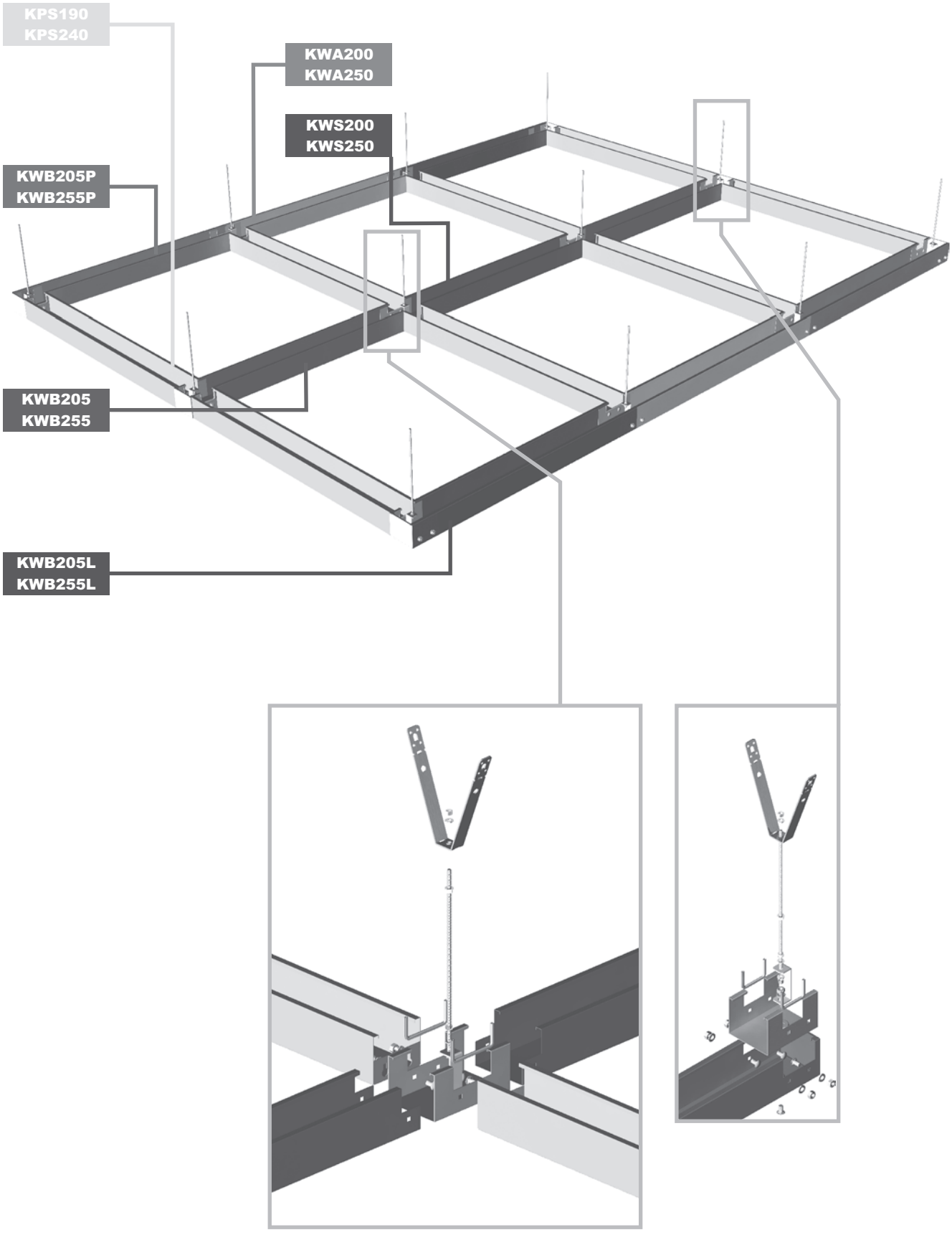
KPS190
KPS240
KWA200
KWA250
KWS200
KWS250
KWB205P
KWB255P
KWB205
KWB255
KWB205L
KWB255L