PCE

Connection
to the future

PRCD-S+

The crucial **PLUS** in safety!

Mobile personal protection
device to prevent electrical injury
especially on construction sites.

PCE PROTECT

PRCD-S+

Mobile personal protection on construction sites

PCE

Connection to the future

Why

PRCD-S+ ?

Craftsmen very often have to connect their electrical devices to outlets (feeding points), where their function and safety is unknown. Usually incorrect electrical installations are not visible immediately and therefore extremely dangerous. Serious accidents may result.

PCE's **PRCD-S+** protects the user reliably against incorrect electrical installations.

PRCD-S+ = **P**ortable **R**esidual **C**urrent **D**evice - **S**afety **P**lus

Previously there was only PRCD-S.
Now there is **PRCD-S+** from PCE!

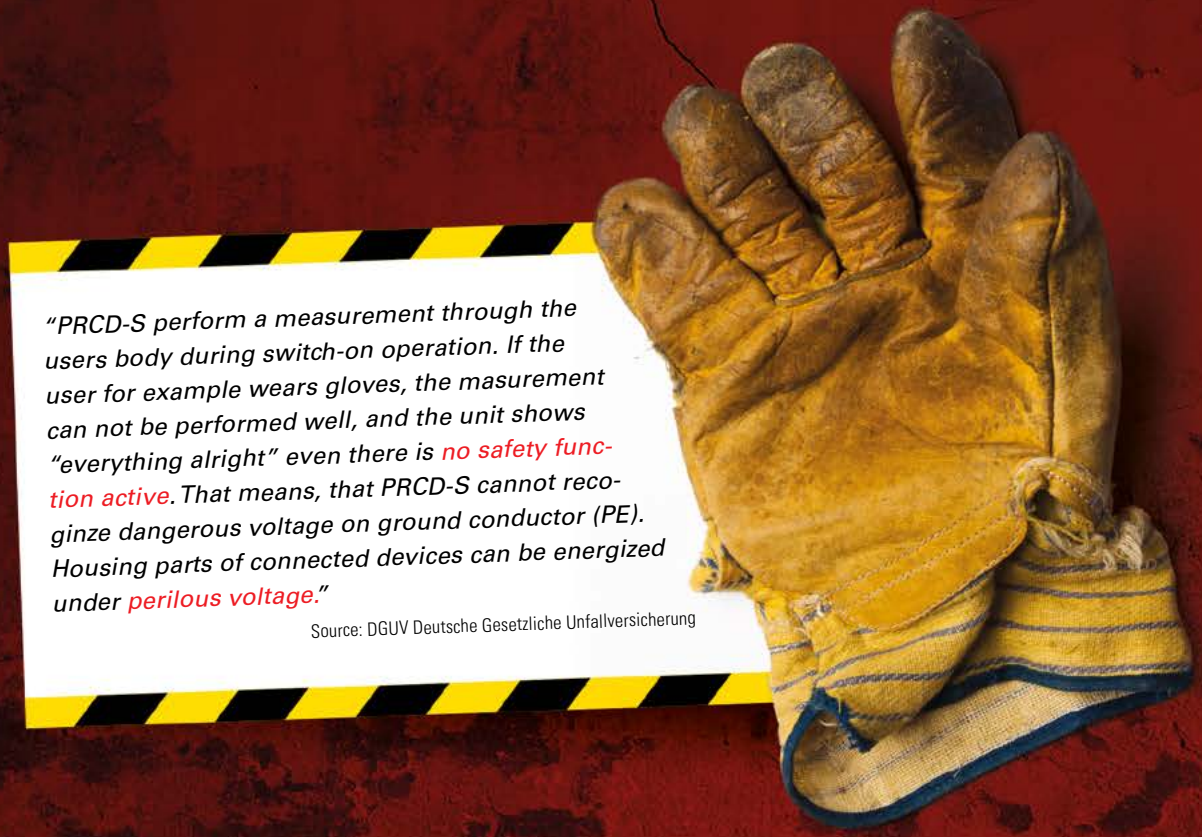

"PRCD-S perform a measurement through the users body during switch-on operation. If the user for example wears gloves, the masurement can not be performed well, and the unit shows "everything alright" even there is no safety function active. That means, that PRCD-S cannot recoginze dangerous voltage on ground conductor (PE). Housing parts of connected devices can be energized under perilous voltage."

Source: DGUV Deutsche Gesetzliche Unfallversicherung

The new **PRCD-S+** from PCE recognizes such measurement errors and does not switch on!

The crucial PLUS in safety!

www.prcd-s.info

Advantages and functions of the **PRCD-S+** from PCE:

1 **PLUS** Before every switch-on procedure and during operation a **fully automatic** verification is performed in order to check the correct supply conditions.
The classic "test button" is eliminated.

2 **PLUS** Measuring errors caused, for example, by the wearing of a glove when switching on are indicated by the signal unit flashing red. In this case, the **PRCD-S+** from PCE gives a visual warning and **does not switch on**.

3 **PLUS** The **LED signal unit** (red/green) visualizes error situations and offers a permanent status indication.

4 **PLUS** The PE conductor circuit is switched on in advance and switched off with a delay.

5 **PLUS** Failure situations like external voltage on the PE conductor or fault current above rated values cause an **interruption of L and N**. The **PE conductor stays closed** and keeps being monitored!

6 **PLUS** Overvoltage will be detected - the **PRCD-S+** switches off or cannot be switched on.

7 Undervoltage will be recognized and the **PRCD-S+** switches off.

8 The **PRCD-S+** recognises conductor interruptions or wiring errors from the source system.

9 The **PRCD-S+** from PCE is very handy and light weight, much simpler in comparison to an isolation transformer and cheaper in acquisition and usage.

PRCD-S+

The crucial **PLUS** in safety!

PCE

Connection to the future

Protection | Secondary accidents may occur! | Mortal danger!

Installation failure

	RCD (FI) 2-pole	PRCD 2-pole	PRCD 3-pole	PCE PRCD-S+
L or N interrupt 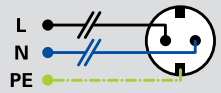	Secondary accidents may occur!	Protection	Protection	Protection — Switch-on not possible - no power supply; In case of interruption during operation all conductors switch off.
PE recognition 	Secondary accidents may occur!	Secondary accidents may occur!	Secondary accidents may occur!	Protection — Switch-on not possible; In case of interruption during operation all conductors switch OFF.
Installation failure 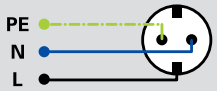	Mortal danger!	Mortal danger!	Protection	Protection — Switch-on not possible.
Under- / Over voltage 	Mortal danger!	Mortal danger!	Mortal danger!	Protection — **PLUS** Switch-on not possible;

External failure

Leakage current ≥ 30mA (≥ 10mA) 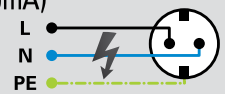	✓	✓	✓	✓	Switch-on not possible. During operation L and N switch-off and **PLUS** **PE conductor circuit remains closed!**
PE under voltage at switch-on 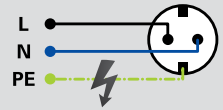	☠	☠	☠	✓	Switch-on not possible. **PLUS** **Error recognition (glove!)**
External voltage at PE 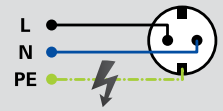	✓	✓	☠	✓	In case of external voltage on the PE conductor L and N switch-off and **PLUS** **PE conductor circuit remains closed!**

ONE-BUTTON HANDLING

PLUS **The classic „test button" is eliminated.** Before every switch-on procedure and during operation a **fully automatic** verification is performed in order to check the correct supply conditions.

PERFECT PROTECTION

PLUS Switching on is only possible with **bare hand.** Measuring errors caused, for example, by the wearing of a glove when switching on are indicated by the signal unit flashing red. In this case, the PRCD-S+ from PCE gives a visual warning and **does not switch on**.

PLUS The PE conductor circuit is switched on in advance and switched off with a delay.

MAXIMUM SAFETY

PLUS Failure situations like external voltage on the PE conductor or fault current above rated values cause an **interruption of L and N**. The **PE conductor stays closed** and keeps being monitored!

PLUS Overvoltage will be detected – the PRCD-S+ switches off or cannot be switched on.

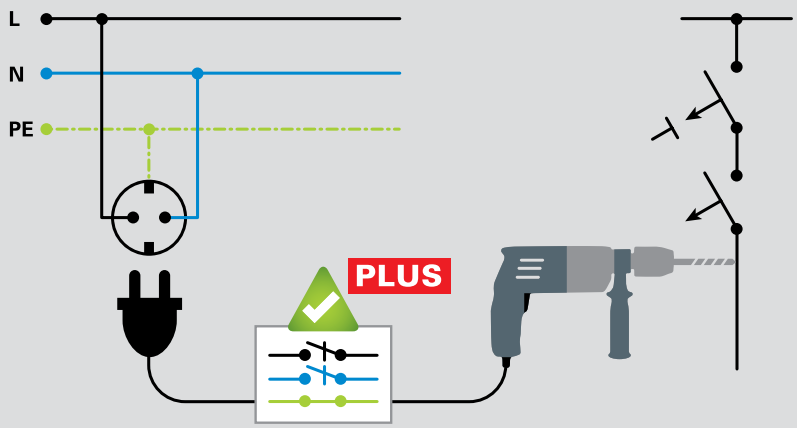

PC Electric GesmbH
Diesseits 145, A-4973 St. Martin im Innkreis
TEL +43 7751 61220 | office@pcelectric.at

www.prcd-s.info

PCE PROTECT

How does PCE's **PRCD-S+** work?

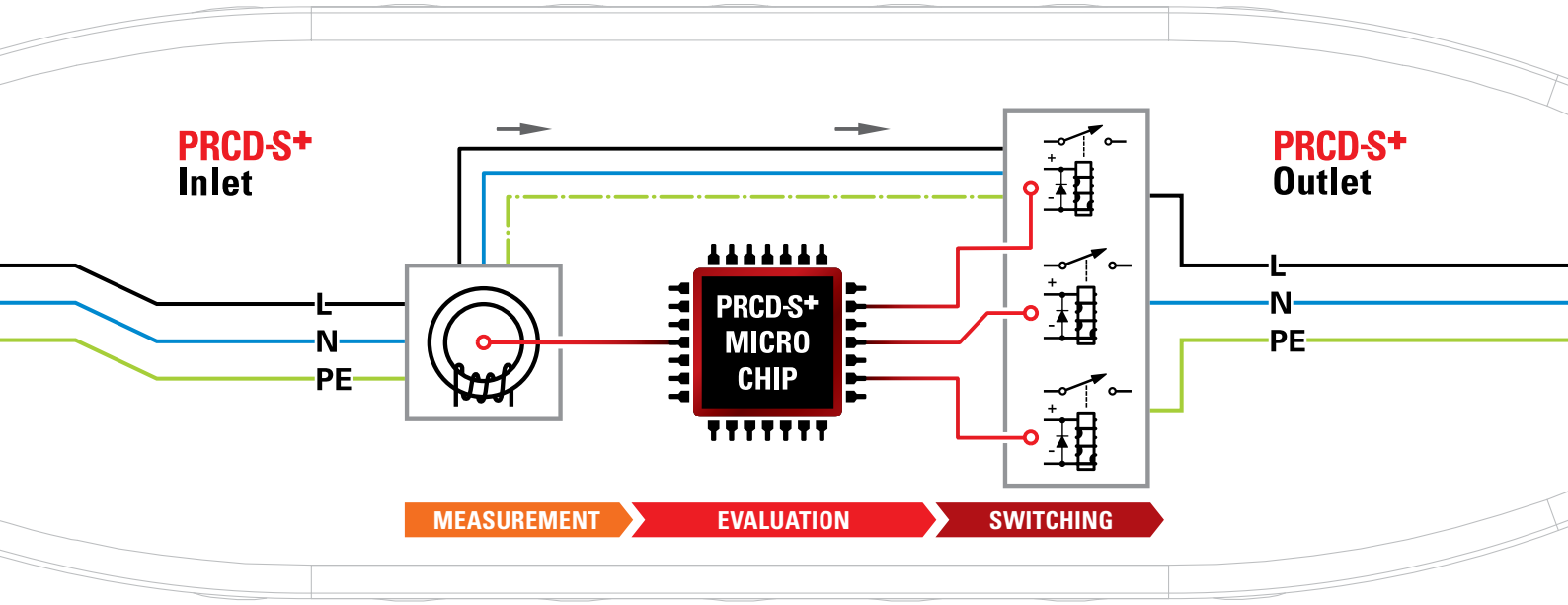

<block diagram>

After plugging in the **PRCD-S+** into a socket outlet with unknown function and safety protection, an **automatic check** is performed. If everything is correct, the LED signal starts blinking **green** after about 1-2 seconds and the **PRCD-S+** can be switched ON by pushing the button shortly. The LED signal stays **green**. The **PRCD-S+** is now ready for use and on the output side an electrical appliance can be used.

After switching on the electrical appliance the **PRCD-S+** serves as **residual current protective device (RCD)** and protects the user against dangerous current, caused by damaged electrical devices. The **PRCD-S+** also recognizes **undervoltage** and switches off, therefore an autonomous resetting of the electrical appliance after power outage is impossible.

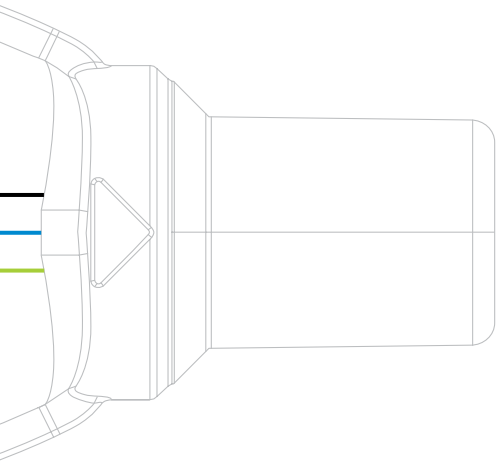

The **PRCD-S+** is to be used as:

portable residual current device with rated residual current $I_{\Delta n} \leq 30$ mA for alternating current, pulsating DC residual currents and phase capped fault currents.

The **PRCD-S+** is not to be used as:

- Refrigeration devices or similar applications (no automatic switching on after a power failure)
- Machines with high inrush currents
- IT-power systems (isolation transformers, power generators, etc.)

For the correct functioning of the **PRCD-S+** device, the presence of a protective conductor is imperative.

Regulations (excerpt, orig. Austrian/German Version)

Elektroschutzverordnung ESV 2012 - BGBl. II
Ausgegeben am 6. Februar 2012- Nr. 33

§ 5 Z3. Arbeitgeber/innen haben dafür zu sorgen, dass ortsveränderliche elektrische Betriebsmittel, die sie ihren Arbeitnehmer/innen als Arbeitsmittel zur Verfügung stellen, auf Baustellen oder auf auswärtigen Arbeitsstellen nur dann an Steckdosen, die Teil einer bestehenden Hausinstallation oder einer ähnlichen Anlage sind, betrieben werden, wenn

a) feststeht, dass die Steckdose durch eine Fehlerstrom-Schutzeinrichtung mit einem Nennfehlerstrom von maximal 0,03 Ampere geschützt ist oder
b) ein ortsveränderlicher Adapter mit eingebauter Fehlerstrom-Schutzeinrichtung mit einem Nennfehlerstrom von maximal 0,03 Ampere verwendet wird.

DGUV Information 203-006 (bisher BGI/GUV-I 608)
Auswahl und Betrieb elektrischer Anlagen und Betriebsmittel auf Bau- und Montagestellen (Mai 2012)

4.2.5.1 Steckdose mit unbekannter Schutzmaßnahme
Um die in Abschnitt 3 genannten Steckdosen in einer Gebäudeinstallation nutzen zu können, ist ein zusätzlicher Schutz erforderlich. Dieser kann durch eine ortsveränderliche Fehlerstrom-Schutzeinrichtung (PRCD nach **VDE 0661**) realisiert werden, die nachfolgende Anforderungen erfüllt:

- Bemessungsdifferenzstrom $I_{\Delta n} \leq 30$ mA
- allpolig schaltend, einschließlich Schutzleiter
- Unterspannungsauslösung
- kein selbständiges Wiedereinschalten nach Spannungswiederkehr
- die Schutzeinrichtung darf sich nicht einschalten lassen, wenn der Schutzleiter unterbrochen ist oder unter Spannung steht,
- wenn während des Betriebes Spannung auf dem Schutzleiter auftritt oder der Schutzleiter unterbrochen wird, muss die Schutzeinrichtung abschalten,
- beim Auftreten von Fremdspannung auf dem Schutzleiter, z.B. durch Anbohren einer Leitung eines anderen Stromkreises, darf die Schutzeinrichtung den Schutzleiter **nicht** abschalten.

www.prcd-s.info

Technical data

Portable residual current device
with additional safety functions

Rated values: 230V~, 50Hz, 16A
PE conductor circuit is switched on in advance and switched off with a delay
Rated residual current : 30mA (10mA)
Ambient temperature: -25°C bis +45°C
Connection cross-section: 1–2,5mm²
Standards/code DIN VDE 0661
and DGUV Information 203-006 (former BGI/GUV-I 608)

REG.-Nr. F069

IP55

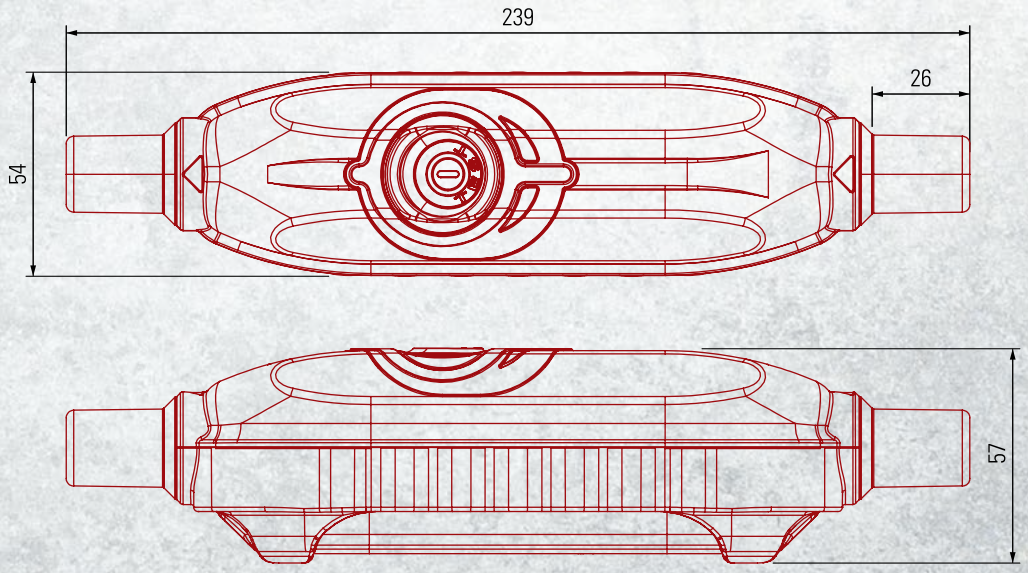

Dimensions in mm

PRCD-S+ Products

Ref.

967011355

Mobile personal protection device PRCD-S+

for direct use inline with connection cords
Cable inline version **PRCD-S+** 16A 30mA IP55

4670001

PRCD-S+ Safety extension cord IP44

3m H07RN-F 3G1,5
with mobile personal protection device **PRCD-S+** 16A 250V~ 30mA,
mounted rubber safety plug and rubber safety connector 16A 250V~

4670002

PRCD-S+ Safety extension cord with 3-way connector IP44

3m H07RN-F 3G1,5
with mobile personal protection device **PRCD-S+** 16A 250V~ 30mA,
mounted rubber safety plug and rubber 3-way connector 16A 250V~

9250027

PRCD-S+ Safety cable reel XREEL®250

25m H07RN-F 3G1,5, 3x safety sockets (individually replaceable) with sealing bulge and self closing hinged lid 16A 250V, thermo protection switch and rubber safety plug (dual earthing system).
Including mobile personal protection device **PRCD-S+** 16A 250V~ 30mA, IP44

9350001

PRCD-S+ Safety cable reel XREEL®310

40m H07RN-F 3G2,5, 4x safety sockets (individually replaceable) with sealing bulge and self closing hinged lid 16A 250V, thermo protection switch, power indicator light and rubber safety plug (dual earthing system).
Including mobile personal protection device **PRCD-S+** 16A 250V~ 30mA, IP44

000256

Carrying case for PRCD-S+

Robust, stackable carrying case made of polypropylen for perfect storage and carrying of your **PRCD-S+** safety device or any other equipment.
outside dimensions: 388 x 388 x 110 mm (WxHxD)
inside dimensions: 370 x 295 x 100 mm (WxHxD)

without content

Other versions on request.

PCE

Connection
to the future

PC Electric GesmbH

Diesseits 145

4973 St. Martin im Innkreis · AUSTRIA

TEL +43 7751 61220

FAX +43 7751 6969

office@pcelectric.at

www.pcelectric.at

098366 EN 08/2020